PROJECT MANUAL

ROOF REPLACEMENT and REPAIRS – BUILDING B

FIRST COAST TECHNICAL COLLEGE
2980 Collins Avenue
St. Augustine, Florida 32084

FOR

St. Johns County School District
299 School House Road
St. Augustine, Florida 32084

PREPARED BY:

A/R/C ASSOCIATES, INCORPORATED
601 North Fern Creek Avenue - Suite 100
Orlando, Florida 32803
(407) 896-7875 FAX # (407) 898-6043

Date: November 6, 2020

A/R/C Project No: 20021.00
SJCSD Bid # 2020-35

COPYRIGHTED 2020 BY A/R/C ASSOCIATES, INCORPORATED

This Project Manual is a copyrighted document of A/R/C Associates, Incorporated and may not be reproduced or excerpted from in whole or in part without the express written permission of A/R/C Associates, Incorporated. It is only to be used for the project and site specifically identified herein and is not to be used on any other project or extensions of this project. This document is to be returned upon request.

James W Ripley AR-12758

PROJECT MANUAL INDEX

ROOF REPLACEMENT and REPAIRS – BUILDING B

FIRST COAST TECHNICAL COLLEGE
2980 Collins Avenue
St. Augustine, Florida 32084

FOR

St. Johns County School District
200 School House Road
St. Augustine, Florida 32084

PREPARED BY:

A/R/C ASSOCIATES, INCORPORATED
601 North Fern Creek Avenue - Suite 100
Orlando, Florida 32803
(407) 896-7875 FAX # (407) 898-6043

Date: **November 6, 2020**

A/R/C Project No: 20021.00
Bid # 2020-35

Section 0001	Title Page	1 (only)
Section 0003	Table of Contents	1 thru 3

Bidding Requirements, Contract Forms, Conditions of the Contract, and General Requirements

	Advertisement for Bids	1 thru 2
Section A	Information for Bidders	1 thru 12
Section B	Form of Proposal	1 thru 6
	Bid Bond	7 thru 8
	Sub-Contractor List	9
	Manufacturer's Notice of Intent to Issue Roof Warranty	10 thru 11
	Jessica Lunsford Act	12 thru 13
	Public Entity Crime Form	14 thru 15
	Certification Regarding Debarment	1 (only)
	Drug Free Workplace Certification Form	1 (only)
	E-Verify Requirements	1 (only)
	AIA Document A312 – Performance Bond	1 thru 5
	AIA Document A312 – Payment Bond	1 thru 4

Section C	Owner - Contractor Agreement	1 thru 6
	General Conditions	1 thru 86
Section SC	Supplementary Conditions	1 (only)

Division 1 - General Requirements

Section 01090	Reference Standards	1 thru 2
Section 01110	Summary of Work	1 thru 10
	Project Rain Day Form	1 (only)
	Interior Inspection Form	1 (only)
	Exterior Inspection Form	1 (only)
Section 01220	Unit Prices	1 thru 3
Section 01270	Application for Payment	1 thru 3
Section 01280	Schedules of Values	1 thru 4
Section 01281	Schedule of Values Format	1 (only)
Section 01290	Modification Procedures	1 thru 3
Section 01291	Request for Information (RFI) form	1 (only)
Section 01310	Project Meetings	1 thru 4
Section 01320	Schedules and Reports	1 thru 9
Section 01330	Submittal Procedures	1 thru 8
Section 01331	Submittal Cover Form	1 (only)
Section 01332	Submittal Record Log	1 thru 4
Section 01340	Owner Purchase Materials/Equipment	1 thru 5
Section 01450	Quality Control	1 thru 3
Section 01451	Testing Laboratory Service	1 thru 3
Section 01500	Construction Facilities and Temporary Controls	1 thru 5
Section 01600	Product Requirements	1 thru 8
	Product Substitution Request	1 (only)
	Product Substitution Information	1 (only)
Section 01731	Cutting and Patching	1 thru 5
Section 01740	Construction Cleaning	1 thru 4
Section 01770	Closeout Procedures	1 thru 8
Section 01771	Project Closeout Documentation Checklist	1 (only)

Divisions 2 - Site Work

Section 02025	Existing Condition Assessment	1 thru 2
	OMG Fastener Testing Report	1 thru 5
	Roof System Thermal Resistance Calculations	1 (only)
Section 02070	Selective Demolition	1 thru 2

Division 5 – Metals

Section 05500	Metal Fabrications	1 thru 8

Division 6 – Wood

Section 06100	Rough Carpentry	1 thru 5

Division 7 - Thermal and Moisture Protection

Section 07150	Polyurethane Coating	1 thru 14
Section 07410	Standard Seam Metal Roofing	1 thru 12
	Manufacturer's Notice of Intent to Issue Roof Warranty	13 thru 14
	Applicator's Warranty for Roofing	15 thru 16
Section 07530	Thermoplastic Single-Ply Membrane Roofing	1 thru 20
	Manufacturer's Notice of Intent to Issue Roof Warranty	21 thru 22
	Applicator Warranty for Roof Replacement	23 thru 24
Section 07565	Preparation for Reroofing	1 thru 3
Section 07620	Sheet Metal Flashing and Trim	1 thru 7
Section 07900	Joint Sealers	1 thru 5

Division 8 – Openings

Section 08620	Pre-Manufactured Unit Skylights	1 thru 5

Division 15 - Mechanical

Section 15000	Basic Mechanical Requirements	1 thru 3
	Performance Log Data Sheet: Exhaust Fans	1 (only)
	Performance Log Data Sheet: A/C Equipment	1 (only)
Section 15430	Plumbing Specialties	1 thru 2

Division 16 - Electrical

Section 16010	Basic Electrical Requirements	1 thru 4

Drawings and Details

Plans (24 x 36 format)

CS	Cover Sheet, Vicinity Map and Drawing Index
A01	Wind Zone Roof Plan and Building Code Data
A02	Roof Plan and Specific Notes
B01	General Notes, Fastening Schedule and Abbreviations
B02	Perimeter Edge Flashing Details
B03	Roof Edge Details and Fabrications
B04	Roof Edge Details and Fabrications
B05	Metal Roof Fabrication Details
B06	Metal Roof Flashing Details
B07	Rooftop Equipment Flashing Details
B08	Rooftop Penetration Flashing Details
B09	Rooftop Penetration Flashing & Miscellaneous Details
B10	Rooftop Drainage & Miscellaneous Details

Division and Section Numbers listed in the Table of Contents and items of work included in each section conform in general to the CSI Master format. Section numbers listed are merely for identification and may not be consecutive. The Contractor shall verify receipt of all the pages, drawings and details listed in the index. If any are missing or illegible it is the responsibility of the Contractor to request replacements.

ADVERTISEMENT FOR BIDS

Roof Replacement - Building B
First Coast Technical College
Bid # 2020-35

Sealed bids will be received by the **St. Johns County School Board** for the **Roof Replacement, Building B – First Coast Technical College** located in St. Johns County, Florida.

The work shall include the following:

Roof Replacement and Repairs, Building B at designated areas

All plant, labor, material, temporary facilities for general construction and restoration to provide work complete and in place.

All bids **(to include an original and one copy)** must be sealed and clearly marked on the outside **"Bid # 2020- 35, Roof Replacement, Building B, First Coast Technical College".**

Bids will be received in the office of the **St. Johns County School District, Maintenance Office, 299 School House Road, St. Augustine, Florida 32084** until **2:00 p.m**. prevailing local time **Tuesday, February 9, 2021.** Bids received after that time will not be accepted. The Bids will then be opened publicly and read aloud. All bidders will be required to be pre-qualified with the St. Johns County School District or must submit all of the required documentation before the bid, or simultaneously with their bid to be considered for possible award of the contract. In any event, the successful bidder must be pre-qualified by the St. Johns County School District prior to award of the contract. For more information on pre-qualification, contact Dennis Ramharry, Facilities Specialist, St. Johns County School District, at (904) 547-8157.

A **mandatory Pre-Bid Conference** will be held on **Tuesday, January 19, 2021 at 2:00 p.m.** at **First Coast Technical College, Building A** located at **2980 Collins Avenue, St. Augustine, Florida 32084**. All bona fide Bidders shall check in at the school's front office prior to the meeting time.

Drawings and Specifications are available through DemandStar, www.demandstar.com.

Anyone wishing to visit the site must attend the mandatory pre-bid meeting. This will be the only site visit for this project.

All questions concerning the Project shall be submitted in writing to the Design Consultant. This office is the only point where information will be disseminated. **All questions must be received by Monday, February 1, 2021 @ 5:00 p.m.** Send all questions to:

Jim Ripley
A/R/C Associates, Incorporated
601 North Fern Creek Avenue, Suite 100
Orlando, Florida 32803
Email: jimr@arc-arc.com
Phone: 407-896-7875
Fax: 407-898-6043

All questions will be answered via the posting to the DemandStar website www.demandstar.com no later than **Wednesday, February 3, 2021 @ 5:00 PM.**

The District will not respond to questions and inquiries submitted after the deadline stated above. Copies of addendum will be made available for inspection at the Facilities and New Construction office, 3740 International Golf Parkway, Suite 200, St. Augustine, Florida 32092, where bid documents will be kept on file.

No Addendum will be issued later than **Wednesday, February 3, 2021** except an addendum withdrawing the Invitation to Bid or one which includes postponement of the date for receipt of bids or one containing the questions and answers.

All notices relative to this Bid, including but not limited to initial release, addendums, letters of intent and awards will be posted on the DemandStar web site – www.demandstar.com.

Bid Security in the amount of five percent (5%) of the proposal must accompany each proposal in accordance with Instruction to Bidders. No Bid may be withdrawn for a period of forty-five days after the opening thereof.

The successful Bidder will be required to furnish and record in the official records of the county in which the Project is located a 100% Performance Bond and a 100% Labor and Material Payment Bond in the form included herein.

The **St. Johns County School Board** reserves the right to reject any and all Bids, waive informalities and minor irregularities in Bidding and to accept Bids which are considered to be in the best interest of the System.

Dated:

David Lee, Director of Maintenance Services
St. Johns County School District
299 School House Road
St. Augustine, Florida 32084

Published:

A-1. SUBMISSION OF BIDS AND BID OPENING:

A. Bids will be received by the Owner and/or Design Consultant and will be opened and read at the times and places set forth in the Advertisement for Bids. Bidders, or their representative, and other interested persons may be present at the opening of proposals.

B. The envelopes containing the Bids (an original plus one copy) must be sealed and addressed to **St. Johns County School District ("Owner"), Maintenance Office, 299 School House Road, St. Augustine, Florida 32084,** and marked on the outside of the envelope **"Bid # 2020-35, Roof Replacement and Repairs, First Coast Technical College, "Building B"**, with the name of the Bidder and his **Florida** Contractor's Registration or Certification Number.

C. The Bidder shall assume full responsibility for timely delivery at the location designated for receipt of Bids.

A-2. BIDDING DOCUMENTS:

A. Bidding Documents include the Advertisement for Bids, Information for Bidders, Form of Proposal, the Bid Security and the proposed Contract Documents, including any Addenda issued prior to receipt of Bids. All requirements and obligations of the Bidding Documents are hereby incorporated by reference into the Contract Documents and are binding on the Successful Bidder upon award of the Contract.

B. Bidders may obtain complete sets of the Bidding Documents from the issuing office designated in the Advertisement for Bids in the number and for the price, if any, stated therein.

C. Bidders shall use complete sets of Bidding Documents in preparing Bids. Neither the Owner, the Construction Program Manager nor the Design Consultant shall have any responsibility for errors, omissions or misinterpretations resulting from the use of incomplete sets of Bidding Documents.

D. The Owner in making copies of the Bidding Documents available on the above terms does so only for the purpose of obtaining Bids on the Work and does not confer a license or grant for any other use.

A-3. DEFINITIONS:

A. THE BID:

A Bid is a complete and properly signed Bid to do the work for the sums stipulated therein, submitted in accordance with the Bidding Documents.

B. BASE BID:

The Base Bid is the sum stated in the Bid for which the Bidder offers to perform the Work described in the Bidding Documents as the base, to which work may be added or from which work may be deleted for sums stated in Alternate Bids, if any.

A-4. QUALIFICATION OF BIDDER:

A. The Successful Bidder shall perform at least fifteen percent (15%) of the work with forces that are in the direct employment of the Contractor's organization. Prior to the signing of the Contract, the successful Bidder shall submit a statement of work to be performed by his own forces.

B. Prior to Contract award , the successful Bidder shall be prepared to demonstrate that his present organization, direct labor force and prior work experience is of adequate size and development to maintain responsible control of the Project and to schedule, coordinate and perform the work in an expeditious manner and in accordance with the Contract Documents. Contractor shall complete and deliver to the Owner, Design Consultant and/or Construction Program Manager a Bidder's Qualification Statement and audited financial statements for the current and past year, as set forth in the Contract Documents, prior to Contract award. This information will be relied upon and investigated by Owner in determining whether Bidder is the best, responsible and most qualified Bidder.

C. Bidders, whether residents or nonresidents of Florida**,** will be required to provide evidence of proper licensure before their Bids will be considered. Such evidence should be in the form of copies of their Florida license which authorizes Bidder to perform the work.

D. The Owner, Design Consultant and/or the Construction Program Manager will consider, in determining the qualifications of a Bidder, its record in the performance of any Contracts for construction work into which it may have entered with the Owner or with similar public or private bodies or corporations. The Owner expressly reserves the right to reject the Bid of any Bidder if such record discloses that such Bidder, in the sole and exclusive opinion of the Owner, is not the best or most responsible and qualified Bidder or that Bidder has not properly performed some or all of its Contracts or has habitually and without good cause neglected the payment of bills, or has otherwise disregarded his obligations to Subcontractors, material men, suppliers or employees.

E. The Owner, Design Consultant and/or the Construction Program Manager may make such investigation as they deem necessary to determine the responsibility, qualifications and ability of the Bidder to perform the work, and the Bidder shall furnish to the Owner, Design Consultant and/or the Construction Program Manager all such information and data for this purpose as they may request. The Owner reserves the right to reject any Bid if the evidence submitted by, or investigation of

such Bidder, fails to satisfy the Owner that such Bidder is a responsive and responsible Bidder in accordance with the criteria set forth herein. The ability to secure payment and performance bonds for the Work shall not be conclusive evidence of Bidder's financial responsibility. Conditional Bids will not be accepted.

A-5. BIDDER'S REPRESENTATIONS:

A. Each Bidder by submitting his Bid understands Owner is relying upon the Bid and the representations contained therein in awarding the Contract and represents that:

1. He has read and understands that Bidding Documents and his Bid is made in accordance therewith; and Bidder agrees to be bound by the terms and requirements set forth in the Bidding and Contract Documents;
2. He has visited the site, has familiarized himself with the local conditions under which the Work is to be performed in accordance with the Contract Documents, and has correlated his observations with the requirements of the proposed Contract Documents;
3. His Bid is based upon the materials, systems and equipment required by the Bidding Documents without exception; and
4. He has the capability, in all respects, and the moral and business integrity, reliability, technical ability, financial resources, plant, management, superintendence, equipment and materials which will assure effective and efficient good faith performance in full compliance with the Contract Documents and with any and all schedules and Milestone and Completion dates required by the Owner. The Bidder acknowledges and represents that he has made allowances for normal inclement weather or access problems indigenous to the Project Site, in his estimating, planning and scheduling of the Work. The Bidder hereby certifies that the work shall be completed, in place, in full accordance with the Contract Documents, within the time limits specified.
5. Bidder and all persons, firms or entities working by, through or under his general Contract shall at all times comply with the requirements of Sections 1012.32, 1012.465, Florida Statutes and the Jessica Lunsford Act, as amended from time to time by the Florida Legislature and/or as implemented by the Owner. Bidder acknowledges that the requirements for compliance with the referenced Statutes, Act and implementation requirements of the Owner, as they may be changed from time to time during the course of its performance of the work, is included in the Base Bid price. Bidder further acknowledges that it shall not be entitled to any increase in the Contract Time or price as a result of its compliance with the requirements of the referenced Statutes, Act or the Owner’s implementation requirements. Bidder hereby certifies that it and its Subcontractors, materialmen and suppliers, including all of their employees, laborers, staff, leased personnel or others working by through or under the direction of Bidder on the work shall comply with all of the requirements of the above referenced Statutes, Act and Owner’s implementation requirements at all times during the performance of the

work and that such compliance will be at Bidder's sole cost and expense. Upon request, Bidder shall immediately produce evidence of compliance with the above referenced Statutes, Act or Owner's implementation requirements to Owner, Design Consultant and/or Construction Program Manager as to any or all persons, firms, entities or others working at the Project site. Bidder shall be required to immediately remove any persons not in compliance with the requirements of the above referenced Statutes, Act and Owner's implementation requirements upon discovery of non-compliance and to report such non-compliance to the Owner.

B. He agrees that upon receipt of the Notice of Acceptance of his Bid, he will execute the formal Contract, and will deliver all bonds and proof of insurance coverage as required by the Contract Documents.

C. He agrees to execute the formal Contract within ten (10) days from the date of Notice of Award of the Contract, and in case he fails or neglects to appear within the specified time to execute the Contract, Bidder will be considered as having abandoned the Contract, and the entire Bid Security accompanying its Proposal will be forfeited to the Owner by reason of such failure on the part of the Bidder.

D. Contractor shall submit a complete list of all Subcontractors to Owner immediately upon notice of apparent low Bidder status and prior to award of the Contract. Owner shall consider such matters as it deems fit as to each Subcontractor and how, if at all, it impacts on Contractor's responsibility, fitness or ability to perform this Contract and on Bidder's overall responsibility. In addition, Contractor shall submit for approval its as-planned schedule pursuant to the requirements of Article 4 of the General Conditions.

A-6. BID SECURITY:

A. Each Bid must be accompanied by (1) cash, (2) a Cashier's or Certified Check of the Bidder, made payable to the Owner, or (3) a Bidder's bond on the Bid Bond Form provided herein in an amount not less than 5% of his Bid. For purposes of this provision, the amount of the Bid shall be the Base Bid plus all positive amount Alternates. The Bidders bond shall be issued by a surety company licensed to conduct business in **Florida**, which is on the approved U.S. Treasury List, which obtained an A+ rating by the latest Best Insurance Guide and which is otherwise acceptable to the Owner.

B. Said Bid security is given as a guarantee that the Bidder will enter into a Contract if awarded the work and, in the case of refusal or failure to so enter into said Contract, the entire security shall be declared forfeited to the Owner. Such security shall be returned to all but the three lowest Bidders within three days after the opening of Bids and the remaining security will be returned within 48 hours after the Owner and the successful Bidder have executed the Contract. If no Contract has been awarded or the Bidder has not been notified of the acceptance of his Bid, within forty-five (45) days of the Bid opening, the Bidder may withdraw his Bid and request the return of

his Bid security. If, at the Owner's, Design Consultant's or Construction Program Manager's request, the Bidder agrees to extend and maintain his Bid beyond the specified 45 days, his Bid security will not be returned. Bidder hereby agrees that all Bid prices are firm, fixed prices which the Owner may accept up to 45 days from Bid opening. Bidder further acknowledges that it shall not be entitled to any extension of the Contract Time or an increase in the Contract sum, as a result of Owner's election to utilize all or a part of this 45 day period to evaluate the Bids or Alternate Bids.

A-7. LIQUIDATED DAMAGES:

The Successful Bidder, upon his failure or refusal to execute the Contract within ten (10) days after he has received notice of the acceptance of his Bid, shall forfeit to the Owner the entire security deposited with his Bid, as liquidated damages for such failure or refusal.

A-8. SITE CONDITIONS AND CONDITIONS OF THE WORK:

A. Each Bidder must acquaint himself thoroughly as to the character and nature of the work to be done. Each Bidder furthermore must make a careful examination of the site of the work and inform himself fully as to the difficulties to be encountered in the performance of the work, the facilities for delivering, storing and placing materials and equipment, and other conditions relating to construction and labor.

B. No plea of ignorance of conditions that exist or may hereafter exist on the site of the work, or difficulties that may be encountered in the execution of the work, as a result of failure to make necessary investigations and examinations, will be accepted as an excuse for any failure or omission on the part of the successful Bidder to fulfill in every detail all the requirements of the Contract Documents and to complete the Work for the consideration set forth therein, or as a basis for any claim whatsoever from the Bidder. Bidder specifically waives any such claim(s).

C. Insofar as possible, the Successful Bidder, in carrying out his work, must employ such methods or means as will not cause interruption of or interference with the Work of the Owner, the Design Consultant, the Construction Program Manager or any separate Contractor.

A-9. BIDDER'S QUESTIONS, ADDENDA AND INTERPRETATIONS:

A. Bidders and Sub-Bidders shall promptly notify the Owner, prior to submission of their Bid, of any ambiguity, inconsistency or error which they may discover upon examination of the Bidding and Contract Documents or of the site and local conditions. No interpretation of the meaning of the drawings, specifications or other Contract Documents will be made to any Bidder orally, nor may Bidder rely on any such pre-Bid statements in completing his Bid.

B. Every request for such interpretation should be in writing addressed to the **Design Consultant, A/R/C Associates, Inc., attention: James Ripley**. This office is the only point where information will be disseminated. Provide questions via e-mail at jimr@arc-arc.com no later than **Monday, February 1, 2021 at 5:00 PM** the deadline for submitting questions prior to the bid date.

C. Any and all such interpretations and any supplemental instructions will be in the form of written addenda to the Bidding Documents which, if issued, will be emailed or posted to the internet for download. All prospective Bidders registered with the Design Consultant (at the respective email addresses furnished for such purposes) will be notified of the issuance of any such addenda prior to the date or time fixed for the opening of Bids. Neither the Design Consultant, nor the Construction Program Manager nor the Owner will be responsible for any other explanations or interpretations of the proposed documents. Failure of any Bidder to receive any such addendum or interpretation shall not relieve any Bidder from any obligation under his Bid as submitted. All addenda so issued shall become part of the Contract Documents.

D. Each Bidder shall ascertain prior to submitting his Bid that he has received all Addenda issued, and he shall acknowledge receipt and inclusion in his proposal of all Addenda.

A-10. SECURITY FOR FAITHFUL PERFORMANCE:

The Successful Bidder shall furnish and record in the official records of the county where the Project is located a Performance Bond in an amount equal to one hundred percent (100%) of the Contract Sum as security for the faithful performance of this Contract and also a Labor and Material Payment Bond in an amount not less than one hundred percent (100%) of the Contract Sum, as security for the payment of all persons performing labor and furnishing materials under this Contract. Both the Performance Bond and Labor and Material Payment Bond shall be in the forms set forth in the Contract Documents and shall be written by sureties which are licensed to do business in the State of Florida, which are currently on the approved U.S. Treasury List of Sureties, which maintain an A+ rating with Best Insurance Guide, and are otherwise acceptable to the Owner. The Performance Bond and the Labor and Material Payment Bond shall be in separate instruments and shall be delivered to the Owner not later than the date of execution of the Contract. No work or mobilization may proceed until both bonds are executed and delivered to Owner.

A-11. TIME FOR COMPLETION AND LIQUIDATED DAMAGES FOR NON-COMPLETION:

The time for completion of this Contract and liquidated damage for non-completion within the stipulated time shall be as fixed in the Owner-Contractor Agreement.

A-12. LOCATION OF WORK:

The site of the proposed work is on property provided by the Owner, public streets, easements and/or other right-of-ways, as shown on the drawings.

A-13. LIABILITY INSURANCE AND WORKMEN'S COMPENSATION:

The Successful Bidder will be required to carry public liability and workmen's compensation and other insurance in the amounts and under the terms stipulated under the General Conditions.

A-14. BIDDERS REFERRED TO LAWS:

A. The attention of Bidders is called to the provisions of all Federal, Municipal, County and State laws, regulations, ordinances and resolutions, including but not limited to, (the Human Rights Ordinance; the Equal Opportunity, Small and Minority Business Enterprises and the Construction Safety Resolutions; Chapter 6A-2 FAC; Florida Statute 553, The Trench Safety Act, Americans with Disabilities Act, SREF 1997); as well as laws, regulations, ordinance resolutions and permits relating to obstructing streets, maintaining signals, storing and handling of explosives, or affecting the Bidder, or his employees or his work hereunder in his relation to the Owner or any other person. The Bidder shall obey all such laws, regulations, ordinances, permits or resolutions controlling or limiting Contractors while engaged in the prosecution of work under this Contract.

B. The provisions of this Contract shall be interpreted in accordance with the laws of **Florida** and in accordance with the laws, ordinances, regulations, permits and resolutions of **St. Johns County**, if applicable.

A-15. TAXES

All applicable Federal, State and Local Taxes shall be included in the Bidder's proposal. Owner reserves the right to direct purchase materials at Contractor's negotiated prices with material suppliers and thereby generate a tax savings to itself.

A-16. RIGHT TO REJECT BIDS:

The Owner expressly reserves the right to reject any or all Bids, to waive any informalities or minor irregularities in the Bids received, and to accept that Bid which in its judgment, best serves the interest of the Owner. Owner hereby retains full discretion to determine the responsiveness of the Bid and Bidder's responsibility, character, fitness and experience to perform the Work.

A-17. EQUAL PRODUCTS AND SUBSTITUTIONS:

A. Unless otherwise provided in the Contract Documents the naming of a certain brand, make or manufacturer or article, device, product, material, fixture, form or type construction by name, make or catalog number, shall convey the general style, type, character and standard of quality of the article desired and shall not be construed as limiting competition. Any Bidder, in such cases, may, with Owner approval, use any article, device, product, material, fixture, form or type of construction which in the judgment of the Design Consultant, the Construction Program Manager and Owner is equal to that specified considering quality, workmanship, economy of operation, suitability for the purpose intended, and acceptability for use on the Project. Approval by the Owner prior to Bid opening will be in the form of an Addendum to the Specifications issued to all prospective Bidders indicating that the additional makes or brands are equivalent to those specified.

B. The Bidder may request approval for substitutions after award of the Contract in accordance with the provisions of **Article 4.15** of the Contract General Conditions.

A-18. PREPARATION AND SUBMITTAL OF FORM OF BID:

A. Bids shall be submitted utilizing the Form of Proposal as bound herein, or otherwise provided with the Contract Documents, and shall be complete in every respect. The total Bid amount shall be entered in words and figures in the space provided. Where applicable, the unit price or lump sum items, and their extensions, shall be entered in figures in the respective columns provided for each Bid item. All entries shall be typewritten or printed in ink. The signatures of all persons shall be in longhand. Any entry of amount that appears on the face of the Bid to have involved an erasure, deletion, white-out and/or substitution or other such change or alteration, shall show by them the initials of the person signing the Bid and the date of the change or alteration. A failure to comply with this requirement may be cause for disqualification or rejection of the Bid.

B. For Unit Price Bids, in the event of any discrepancies between the unit prices and the extensions thereof or the total Bid amount, the unit prices shall govern. For Lump Sum Bids, in the event of a discrepancy between the Bid amount in writing and that in figures, the written value shall govern.

C. Bids shall not contain any conditions, restatement or qualifications of work to be done, and Alternate Bids will not be considered unless called for. No oral Bids or modifications will be considered.

A-19. MODIFICATION OR WITHDRAWAL OF BID:

A. Prior to the time and date designated for receipt of Bids, any Bid submitted may be modified or withdrawn by notice to the party receiving Bids at the place designated for receipt of Bids. Such notice shall be in writing over the signature of the Bidder or

by telegrams; if by telegram; written confirmation over the signature of the Bidder shall be mailed and postmarked on or before the date and time set for receipt of Bids, and it shall be so worded as not to reveal the amount of the original Bid.

B. Withdrawn Bids may be resubmitted up to the time designated for the receipt of Bids provided that they are then fully in conformance with this Information for Bidders.

C. Bid security, if any is required, shall be in an amount sufficient for the Bid as modified or resubmitted.

A-20. DETAILED BID BREAKDOWN:

If the Owner, Design Consultant or the Construction Program Manager directs, the Bidder shall provide a detailed breakdown and internal job cost estimate of his Bid acceptable to the Owner, Design Consultant or the Construction Program Manager. In addition to verifying accounting requirements, the breakdown may be used by the Owner to determine whether the Bidder has grossly misjudged the requirements of any area. Failure to provide the requested detailed breakdown may result in rejection of the Bid proposal or, if after Contract award, may be deemed a default or breach of the Contract.

A-21. AWARD OF CONTRACT:

The Contract will be awarded to the lowest responsive and responsible Bidder, who's Bid is considered to be in the best interest of the Owner. This determination will be in the sole discretion of the Owner and based upon the character, fitness, experience, history and financial status of the Bidder.

A. The Lowest Bidder is determined by the aggregate amount of the unit prices set forth in the form of Bid, if work is Bid on a unit price basis, or the aggregate amount of the Base Bid, plus any Alternates selected by the Owner.

B. A Responsive Bidder shall mean a Bidder who has submitted a Bid which conforms, in all material respects, to the Bidding Documents.

C. A Responsible Bidder shall mean a Bidder who has the capability, in all respects, to perform fully the Contract requirements and the moral and business integrity and reliability which will assure good faith performance. In determining responsibility, the following criteria may be considered:

1. The ability, capacity and skill of the Bidder to perform the Contract or provide the service required;
2. Whether the Bidder can perform the Contract or provide the service promptly, or within the time specified, without delay or interference;
3. The character, integrity, reputation, judgment, experience and efficiency of the Bidder;

4. The Bidder's quality of performance on previous Contracts or services. For example the following information will be considered:

    a. The administrative and consultant cost overruns incurred by Owners on previous contracts with Bidder,
    b. The Bidder's compliance record with contract general conditions on other Projects,
    c. The submittal by the Bidder of excessive and/or unsubstantiated extra cost proposals and claims on other Projects,
    d. The Bidder's record for completion of the work within the contract time or within contract milestones and Bidders compliance with scheduling and coordination requirements on other projects,
    e. The Bidder's demonstrated cooperation with the Owner, the Construction Program Manager or the Design Consultant and other contractors on previous contracts,
    f. Whether the work performed and materials furnished on previous contracts was in accordance with the contract documents on those projects;
5. The previous and existing compliance by the Bidder with laws and ordinances relating to the contracts or services;
6. The sufficiency of the financial resources and ability of the Bidder to perform the Contract or provide the service;
7. The quality, availability and adaptability of the goods or services to the particular use required;
8. The ability of the Bidder to provide future maintenance and service for the warranty period of the Contract;
9. Whether the Bidder has or is allegedly failing to perform its obligations on any other projects, is in arrears on any of its financial obligations, has required the assistance of its Surety on any other projects to pay its obligations to others or perform the work on those projects, including warranty repairs;
10. Such other information as may be secured by the Owner or the Construction Program Manager having a bearing on the decision to award the Contract, which may include, but not be limited to:
    a. The ability, experience and commitment of the Bidder to properly and reasonably plan, schedule, coordinate and execute the Work,
    b. Whether the Bidder has ever been debarred from Bidding by any other public or private Owner or found ineligible for Bidding on any other Projects.
    c. Bidder's litigation history and reputation with other owners for whom Bidder has previously worked.
    d. Bidder's Public Entity crime statement, which must be returned with the Bid or which may form the basis for Bid rejection.
    e. Whether Bidder's Contract on other Projects have ever been terminated.

D. The purpose of the above is to enable the Owner to select the Bid which is in the best interests of the Owner. The ability of the low Bidder to provide the required bonds will not sufficiently demonstrate the responsibility of the Bidder.

E. The Owner reserves the right to defer award of this Contract for a period of forty-five (45) days after the due date of Bids. During this period time, the Bidder shall guarantee the prices quoted in his Bid. No increase in the Contract Time or Contract Price shall be awarded to Bidder as a result of the Owner's use of some or all of the time allocated to it herein for its award decisions on either the Base Bid or Bid Alternates.

A-22 INFORMATION AVAILABLE TO BIDDERS:

A. Field Investigation Information: Any provided Field Investigation Data and/or photographs are not a part of the construction Contract Documents and is enclosed within this document, or posted to the internet, for informational use only.

1. Any enclosed report and test cut data, and any interpolations of conditions between test cut locations is not a warrant or guarantee by the Owner, Construction Program Manager, or Design Consultant of existing project conditions.
2. The Contractor should visit the site and acquaint himself with all existing conditions. Prior to Bidding, Bidders may make their own site investigations to satisfy themselves as to the existing building and roofing conditions, but such site investigations shall be performed only under the time schedules and arrangements approved in advance by the Owner.

END OF SECTION A
INFORMATION FOR BIDDERS

FORM OF PROPOSAL
Bid # 2020-35

Contract for **St. Johns County School Board** for
Roof Replacement and Repairs – Building B
at
First Coast Technical College

TO: **St. Johns County School Board**
Maintenance Office
299 School House Road
St. Augustine, Florida 32084

FROM:

Bidder_____

Address _____

City _____State _____Zip _____

1. BASE BID PROPOSAL:

Having become completely familiar with the local conditions affecting the cost of work at the place where work is to be executed, and having carefully examined the site conditions as they currently exist, and having carefully examined Bidding and Contract Documents prepared by:

A/R/C Associates, Incorporated and titled: **Roof Replacement and Repairs, Building B, First Coast Technical College, Bid Number 2020-35,** together with any addenda to such Bidding Documents as listed hereinafter, the undersigned hereby proposes and agrees to provide all labor, materials, plant, equipment, transportation and other facilities as necessary and/or required to execute all of the work described by the aforesaid Bidding and Contract Documents for the lump sum consideration of:

_____Dollars

($_____), said amount being hereinafter referred to as the Base Bid

or Base Bid Proposal.

2. ALTERNATES:

The undersigned proposes to perform Alternates for stated resulting additions to or deductions from the Base Bid. Additions and deductions shall include any modifications of work or additional work that undersigned may be required to perform by reason of the acceptance of any Alternate, additional information is contained within section 01230 – Alternates.

Adjust Base Bid: DEDUCT (__) ADD ( ) by:

_____ Dollars ($_____ ___).

3. UNIT PRICES

Unit prices are complete for labor, equipment, and material; overhead and profit for additions will be based on stated percentages. See specification section 01220 – Unit Prices for additional information.

Descriptions:

Unit Price "A": Cost per lineal foot to remove any existing deteriorated wood blocking and/or fascia along roof edge or within roof system or accessories and replace with new 2 x 4 pressure treated wood blocking per Section 06100. The exact locations and extent of replacement to be determined in the field by the Owner and Architect. Base bid shall include the replacement of One hundred (100) lineal feet of pressure treated wood blocking and/or fascia.

_____ $_____ per Lineal Foot.

Unit Price "B": Cost per square foot to remove any existing deteriorated plywood sheathing within mansard roof system and replace with new 5/8" pressure treated plywood sheathing per Section 06100. The exact locations and extent of replacement to be determined in the field by the Owner and Architect. Base bid shall include the replacement of Sixty-Four (64) square feet of pressure treated plywood sheathing at a cost of

_____ $_____ per Square Foot.

Unit Price "C": Cost per square foot to remove existing deteriorated lightweight insulating concrete (LWIC) and replace with new LWIC patching compound, such as Siplast Zono-Patch (or equal), with a minimum compressive design strength of 300 psi at 28 days. Match existing LWIC manufacturer and product if possible, or utilize appropriate manufacturer recommended patching methods and material. The exact locations and extent of replacement is to be determined in the field by Owner and Architect. Base bid shall include the replacement of one hundred (100) square feet at 3" thickness of damaged lightweight insulating concrete. "Divot" repair as a result of existing roof tear-off is to be considered part of the base bid services, and not part of the unit price costs.

_____ $_____ per Square Foot.

Unit Price "D": Cost per linear foot to provide protective walk pads for rooftop maintenance traffic as approved by the manufacturer. Walk pads can be either those provided by the manufacturer, or an additional layer of single-ply membrane adhered to primary membrane as specified within section 07530. Walk pads to be 3 feet wide. Fully adhere to the finished roof system using the manufacturer approved mastic. The exact locations and extent of walk pad placement shall be determined in the field by the Owner and Architect. Base bid shall include the application of two hundred (200) linear feet of walk pad application.

_____ $_____ per Lineal Foot.

Unit Price "E": Cost per square foot to remove and replace existing damaged and/defaced "lay-in" suspended acoustical ceiling tile to match size, type, manufacturer, and finish of the existing tile, which will need to be field verified by the contractor. The exact locations and extent of replacement to be determined in the field by the Owner and Architect. The base bid shall include removal and replacement of two hundred (200) square feet of damaged acoustic ceiling tiles. If this quantity is not used, the Owner shall receive a credit for the unused quantity based on the unit price. NOTE: Additional ceiling tile damaged during the course of construction by construction events shall be replaced at no additional cost to the Owner.

_____ $_____ per Square Foot.

4. ADDENDA ACKNOWLEDGEMENT:

The undersigned acknowledges receipt of the following addenda: (List by number and date appearing on addenda.)

Addendum No.	Date
_____	_____
_____	_____
_____	_____
_____	_____

5. BID SECURITY:

Bid security in the amount of five (5) percent of the Base Bid is attached, without endorsement, in the sum of_____Dollars ($_____), which will be forfeited in its entirety and is to become the property of the Owner in the event the Contract and Performance and Labor and Material Payment Bonds are not executed within the time set forth in the Contract Documents, as liquidated damages for the delay and additional work caused the Owner.

6. The undersigned declares that the person or persons signing this Proposal is/are fully authorized to sign on behalf of the firm listed and to fully bind the firm listed to all terms of the Bid Solicitation.

7. It is agreed that no person or persons or company other than the firm listed below or as otherwise indicated has any interest whatsoever in this proposal or the Contract that may be entered into as a result of the Proposal and that in all respects the proposal is legal and firm, submitted in good faith without collusion or fraud.

8. It is agreed that the undersigned has complied or will comply with all requirements of local, state, and national laws, and that no legal requirement has been or will be violated in making or accepting this Proposal, in awarding the Contract to Bidder and/or in the prosecution by Bidder of the work required. Bidder and all persons, firms or entities working by, through or under his general Contract shall at all times comply with the requirements of Sections 1012.32, 1012.465, Florida Statutes and the Jessica Lunsford Act, as amended from time to time by the Florida Legislature and/or as implemented by the Owner. Bidder acknowledges that the requirements for compliance with the referenced Statutes, Act and implementation requirements of the Owner, as they may be changed from time to time during the course of its performance of the work, is included in the Base Bid price. Bidder further acknowledges that it shall not be entitled to any increase in the Contract Time or price as a result of its compliance with the requirements of the referenced Statutes, Act or the Owner's implementation requirements. Bidder hereby certifies that it and its Subcontractors, materialmen and suppliers, including all of their employees, laborers, staff, leased personnel or others working by through or under the direction of Bidder on the work shall comply with all of the requirements of the above referenced Statutes, Act and Owner's implementation requirements at all times during the performance of the work and that such compliance will be at Bidder's sole cost and expense. Upon request, Bidder shall immediately produce evidence of compliance with the above referenced Statutes, Act or Owner's implementation requirements to Owner, Design Consultant and/or Construction Program Manager as to any or all persons, firms, entities or others working at the Project site. Bidder shall be required to immediately remove any persons not in compliance with the requirements of the above referenced Statutes, Act and Owner's implementation requirements upon discovery of non-compliance and to report such non-compliance to the Owner.

9. The following information is provided pursuant to the Contract Documents:

a. Legal Name of Firm:

_____

.1 If Firm is a corporation; state that corporation is organized under the laws of the State of_____. Please affix corporate seal to this Form of Bid.

.2 If Firm is a partnership, state names of partners:

_____

_____

_____

.3 If Firm is an individual using a trade name, state name of individual:

_____

_____

b. Contractor Registration Number: _____

Respectfully submitted, this

_____ day of _____, 20_____

_____
(Signature)

_____
(Name Typed)

_____
(Title)

(SEAL IF BIDDER IS A CORPORATION)

End of Form of Proposal

Enclosures:

1. Bid Bond
2. Sub-contractor List
3. Manufacturer's Notice of Intent to Issue Roof Warranty Form
4. Jessica Lunsford Act Acknowledgement
5. Public Entity Crimes Form
6. Certification Regarding Debarment
7. Drug Free Workplace Certification
8. E-Verify Requirements

BID BOND

KNOW ALL MEN BY THESE PRESENTS, That we, _____

_____,

of _____, hereinafter

called the Principal, and _____,

(Surety), a corporation organized and existing under the Laws of the State of _____,

and authorized to transact business in the State of Florida, as Surety, hereinafter called Surety, are held and firmly bound unto the St. Johns County School Board (Owner), hereinafter called Obligee, in the Penal sum of five percent (5%) of the amount Bid, good and lawful money of the United States of America, for the payment of which the Principal and Surety bind themselves, their heirs, executors, administrators, successors and assigns, jointly and severally, firmly by these presents. The Condition of this Obligation is such, that,

WHEREAS the Principal has submitted a Bid to the Obligee on a Contract for the construction of: **Roof Replacement and Repairs, Building B (2020) at First Coast Technical College, St. Johns County School Board Bid #2020-35.**

NOW THEREFORE, if the Obligee shall accept the Bid of the Principal and the Principal shall enter into a Contract with the Obligee in accordance with the terms of such Bid, and give such bond or bonds as may be specified in the Bidding or Contract Documents with good, qualified and sufficient surety for the faithful performance of such construction for the prompt payment of labor and material furnished in the prosecution thereof, then this obligation shall be null and void; otherwise this Bid is to remain in full force and effect for the payment to Obligee of the stated penal sum hereof which shall be forfeited to Owner/Obligee in its entirety as liquidated damages for Principal's failure to execute any such Contract and/or to provide the required payment and performance bonds as required by the Contract Documents.

In witness whereof, we have hereunto set our signatures and seal this _____day of _____, 20_____, all pursuant to due authorization.

_____(Seal)
Principal

By _____
Surety

By _____
Attorney-in-Fact in accordance
with the attached Power of Attorney

STATE OF _____)
) ss:
COUNTY OF _____)

I, _____, a Notary Public in and for the State and County aforesaid, do hereby certify that _____, and _____, whose names are signed to the foregoing bond, this day personally appeared before me in my State and County aforesaid and acknowledged the same. Given under my hand and seal this _____ day of _____, 20_____.

(Notary Public)

My commission expires:

SUBCONTRACTOR LIST

DATE:_____

St. Johns School District
St, Augustine, Florida

Gentlemen:

The undersigned, hereinafter called Contractor has determined to his/her satisfaction that a listed subcontractor has been successfully engaged in this work, has successfully completed installations comparable to that required by this project, is qualified technically and financially to perform that work for which he is listed and is capable of being bonded by an approved Surety Company.

The names and addresses and licenses of subcontractors whose percentage value of work is five percent (5%) or greater than the total construction value of the Project shall be submitted to the Owner and architect with the bid.

Subcontractor	Trade	Florida State Cert. (License) No.**

(Attach additional pages as needed)
**: Applicable To State Certified Construction Trades

In witness whereof, the Contractor has hereunto set his signature and affixed his seal this _____ day of _____, A.D. 20_____.

Firm: _____

By: _____

Title: _____

MANUFACTURER'S NOTICE OF INTENT TO ISSUE ROOF WARRANTY

Standing Seam Metal Roofing

Whereas_____
herein called the "Roofing System Manufacturer" hereby gives notice to:

Owner: _____

Address:_____
of its Notice of Intent to issue its Roof Warranty, to the Owner for the Project,

Project:_____

Address:_____
incorporating the Manufacturer's_____
roofing system or product is installed in accordance with the Contract Documents.

A. Manufacturers' Notice of Intent to Issue Roof Warranty in conformance with the Contract Documents shall be executed by the manufacturer and attached to the bid submittal. Each Bidder shall submit a single form, only from the specified manufacturer, and shall include items 1 and 2 as follows:

A. A detailed description of the components of the manufacturer's system proposed and a list of any other component and accessories, proposed for use in the system that is provided by other manufacturers or suppliers.

a). A statement that the Manufacturer's Representative has thoroughly reviewed the job conditions and project manual, (plans, specifications & details). Having reviewed the above items and project requirements in detail, the Representative will provide a written response to the Design Professional ten days prior to the bid date, if conflicts between the Manufacturer's requirements occur with the above listed documents.

2. A sample of the Manufacturer's Roof Warranty shall be attached to and submitted with this form and the bid package. The manufacturer shall delete all exceptions relative to system failure from high wind conditions based on one of the following options:

a). Uplift pressures due to any locally recorded wind speed of 109 mph or less.

. . . . . or . . . . . .

b). Uplift pressures below the following "Unfactored / (Nominal) Wind Uplift Pressures as calculated per the applicable Florida Building Code and ASCE 7 calculation methods:

a)	Interior of Roof (Zone 1):	- 34 psf
b)	Perimeter of Roof (Zone 2):	- 39 psf
c)	Corners of Roof (Zone 3):	- 39 psf

3. **Twenty (20)** year total roof system warranty inclusive of all newly installed roofing materials, all included products and accessories, including all metal flashings, from existing roof substrate / deck to finish membrane, whether supplied by the membrane manufacturer or by a manufacturer approved / recommended third-party supplier.

Provide a “No Dollar Limit”, single source responsibility, non-deductible roofing warranty inclusive of all material and labor in full compliance with all the requirements of the project specifications.

a) The manufacturer shall modify the roof warranty to include total labor coverage for the warranty period and to cover damage to roof materials and insulation down to the roof deck resulting from water penetration.

b) The manufacturer shall modify the roof warranty to state that the Owner has the right to make emergency repairs without voiding the warranty if the manufacturer or applicator does not respond within 24 hours to notification by the Owner of a defect or leak.

c) The manufacturer shall modify the roof warranty to state that annual inspections with written reports by the Owner, and resulting maintenance, are sufficient to fulfill the periodic inspection requirements of the manufacturer’s warranty.

d.) The warranty shall be governed by the laws of the State of Florida. The sole and exclusive venue for any litigation arising from or related to this Warranty or any work performed under the terms of this Warranty, shall be in St. Johns County, Florida.

4. The manufacturer's Representative shall conduct a Post-Construction field inspection no earlier than **eleven (11) months**, and no later than **twelve (12) months** after the Date of Substantial Completion. Submit a written report within seven (7) days of this visit to the Owner's Maintenance Dept. listing observations, conditions and any recommended repairs or remedial action.

5. The manufacturer will, during the **second** (2nd), and **fifth** (5th), year of this warranty, inspect the roof system and provide a written Executive Summary of the Roof Condition to the Owner.

Further, the manufacturer acknowledges that the applicator:

Roof Applicator’s Name:_____

Address: _____

has been approved to install this roof system since _____, _____ and meets the criteria for an approved applicator listed in the Project Manual.

By signing the above, the Authorized Representative of said Manufacturer certifies and represents the Roofing System Manufacturer with the authority to contract and make the above representations to the Owner.

By: _____ Date: _____

Signature of Authorized Representative

Name:_____ Title: _____

Witness:_____ Date: _____

MANUFACTURER'S NOTICE OF INTENT TO ISSUE ROOF WARRANTY

Thermoplastic Single-ply Roofing

Whereas
herein called the "Roofing System Manufacturer" hereby gives notice to:

Owner:

Address:_____
of its Notice of Intent to issue its Roof Warranty, to the Owner for the Project,

Project:_____

Address:_____
incorporating the Manufacturer's_____

roofing system or product is installed in accordance with the Contract Documents.

A. Manufacturers' Notice of Intent to Issue Roof Warranty in conformance with the Contract Documents shall be executed by the manufacturer and attached to the bid submittal. Each Bidder shall submit a single form, only from the specified manufacturer, and shall include items 1 and 2 as follows:

1. A detailed description of the components of the manufacturer's system proposed and a list of any other component and accessories, proposed for use in the system that is provided by other manufacturers or suppliers.

   a). A statement that the Manufacturer's Representative has thoroughly reviewed the project requirements defined by the project document, (plans, specifications & details). Having reviewed the above items and project requirements in detail, the Representative will provide a written response to the Design Professional ten days prior to the bid date, if conflicts between the Manufacturer's requirements occur with the above listed documents.

2. A sample of the Manufacturer's Roof Warranty shall be attached to and submitted with this form and the bid package. The manufacturer shall delete all exceptions relative to system failure from high wind conditions based on one of the following options:

   a). Uplift pressures due to any locally recorded wind speed of 109 mph or less.

   . . . . . or . . . . . .

   b). Uplift pressures below the following "Unfactored / (Nominal) Wind Uplift Pressures as calculated per the applicable Florida Building Code and ASCE 7 calculation methods:
   1) Interior of Roof (Zone 1): - 34 psf
   2) Perimeter of Roof (Zone 2): - 52 psf
   3) Corners of Roof (Zone 3): - 74 psf.

3. **Twenty (20)** year total roof system warranty inclusive of all new roofing materials, all associated products and accessories, including all metal flashings, from lightweight insulating concrete roof substrate / deck to finish membrane, whether supplied by the membrane manufacturer or by a manufacturer approved / recommended third-party supplier.

Provide a “No Dollar Limit”, single source responsibility, non-deductible roofing warranty inclusive of all material and labor in full compliance with all the requirements of the project specifications.

a). The manufacturer shall modify the roof warranty to include total labor coverage for the warranty period and to Cover damage to roof materials and insulation down to the roof deck resulting from water penetration.

b). The manufacturer shall modify the roof warranty to state that the Owner has the right to make emergency repairs without voiding the warranty if the manufacturer or applicator does not respond within 24 hours to notification by the Owner of a defect or leak.

c). The manufacturer shall modify the roof warranty to state that annual inspections with written reports by the Owner, and resulting maintenance, are sufficient to fulfill the periodic inspection requirements of the manufacturer’s warranty.

d). The warranty shall be governed by the laws of the State of Florida. The sole and exclusive venue for any litigation arising from or related to this Warranty or any work performed under the terms of this Warranty, shall be in St. Johns County, Florida.

4. The manufacturer's Representative shall conduct a Post-Construction field inspection no earlier than **eleven (11) months**, and no later than **twelve (12) months** after the Date of Substantial Completion. Submit a written report within seven (7) days of this visit to the Owner's Maintenance Dept. listing observations, conditions and any recommended repairs or remedial action.

5. The manufacturer will, during the second (2nd), and fifth (5th), year of this warranty, inspect the roof system and provide a written Executive Summary of the Roof Condition to the Owner.

Further, the manufacturer acknowledges that the applicator:

Roof Applicator’s Name:_____

Address: _____

has been approved to install this roof system since _____, _____ and meets the criteria for an approved applicator listed in the Project Manual.

By signing the above, the Authorized Representative of said Manufacturer certifies and represents the Roofing System Manufacturer with the authority to contract and make the above representations to the Owner.

By: _____ Date:
Signature of Authorized Representative

Name:_____ Title:

Witness:_____ Date:

ST. JOHNS COUNTY SCHOOL DISTRICT

SWORN STATEMENT PURSUANT TO SECTIONS 1012.465 AND 1012.467, FLORIDA STATUTES, THE JESSICA LUNSFORD ACT

THIS FORM MUST BE SIGNED AND SWORN TO IN THE PRESENCE OF A NOTARY PUBLIC OR OTHER OFFICIAL AUTHORIZED TO ADMINISTER OATHS.

1. This sworn statement is submitted to the School Board of St. Johns County, Florida (Hereinafter "Board" or "School Board") by_____
   (Print individual's name and title)

   for_____ whose
   (Print Name of entity submitting sworn statement)

   business address is_____

   _____

   and its Federal Employer Identification Number (FEIN) is_____. If the entity has no FEIN, include the Social Security Number (SSN) of the individual signing this sworn statement and so indicate.

2. I, _____, am duly authorized to make this sworn statement on
   (Print individual's name and title)

   behalf of_____.
   (Print Name of entity submitting sworn statement)

3. I understand that during the 2005 Legislative Session, House Bill 1877, The Jessica Lunsford Act (hereinafter "The Act" or "Act") was passed and approved by Governor Bush on May 2, 2005, with an effective date of September 1, 2005.

4. I understand that the Act amended the background screening requirements of Section 1012.465, Florida Statutes (2004) for all non-instructional school district employees or **"contractual personnel**" by requiring all non-instructional school district employees or contractual personnel who are permitted access on school grounds when students are present to undergo and pass "level 2 background screening", and further, I understand the Act defines **"contractual personnel"** to include any vendor, individual, or entity under contract with the Board.

5. I understand that pursuant to Section 1012.465, Florida Statutes, non-instructional school district employees or contractual personnel who are permitted access on school grounds when students are present, who have direct contact with students or who have access to or control of school funds must meet level 2 screening requirements as described in Sections 1012.32 and 435.04, Florida Statutes.

6. I further understand that Section 1012.467, Florida Statutes (2007) requires a fingerprint-based criminal history check for all "non-instructional contractors," which is defined as any individual who received remuneration for services performed for the school district or a school, but who is not otherwise considered an employee of the school district. "Non-instructional contractor" includes any employee of a contractor who performed services for the school district or the school under the contract and any subcontractor and its employees who are permitted access to school grounds when students are present, whose performance of the contract with the school or school board are not anticipated to result in direct contact with students, and for whom anticipated contact would be infrequent and incidental.

7. I understand that as a _____ (e.g. A private bus service
   (Type of entity)
   contractor) all contractual personnel, as defined in section 1012.465, Florida Statutes, must meet level 2 screening requirements as outlined in sections 1012.32 and 435.04, Florida Statutes in order to do business with the School Board of St. Johns County, Florida. In addition, all "non-instructional contractors" must meet the screening requirements

outlined in Section 1012.467, Florida Statutes.

8. I understand that "level 2 screening requirements", as defined in Sections 1012.32 and 435.04, and the background check required by Section 1012.467, Florida Statutes means that fingerprints of all contractual personnel and non-instructional contractors must be obtained and submitted to the Florida Department of Law Enforcement for state processing and to the Federal Bureau of Investigation for federal processing.

9. I understand that the School Board will implement local procedures to comply with screening requirements, as defined in Sections 1012.32, 1012.467 and 435.04. I understand that my company must comply with these local procedures as they are developed.

10. I understand that any costs and fees associated with the required background screening will be borne by my company.

11. I understand that any personnel of the contractor found through fingerprint processing and subsequent level 2 background screening to have been found guilty of, regardless of adjudication, or entered a plea of nolo contendere or guilty to any offense outlined in Section 435.04, Florida Statutes (or any similar statute of another jurisdiction), shall not be permitted to come onto school grounds or any leased premises where school-sponsored activities are taking place when students are present, shall not be permitted direct contact with students, and shall not be permitted to have access to school district funds. In addition, any personnel of the contractor found to have been convicted of any offenses listed in Section 1012.467(2)(g), shall not be permitted access on school grounds.

12. I understand that the failure of any of the company's or my affected personnel to meet the screening standards as required by Sections 1012.465 and 1012.467, Florida Statutes, may disqualify my company from doing business with the School Board.

13. I hereby certify that the foregoing statement is true and correct in relation to the company for which I am submitting this sworn statement. I further certify that this statement is being given knowingly and voluntarily by me on behalf of my company.

The company submitting this sworn statement agrees to be bound by the provisions of SECTIONS 1012.32, 1012.465, 1012.467 AND 435.04, FLORIDA STATUTES, THE JESSICA LUNSFORD ACT 2005.

I CERTIFY THAT THE SUBMISSION OF THIS FORM TO THE SCHOOL BOARD OF ST. JOHNS COUNTY, FLORIDA ON BEHALF OF THE COMPANY IDENTIFIED IN PARAGRAPH ONE (1) ABOVE BINDS THE COMPANY TO FULLY COMPLY WITH THE BACKGROUND SCREENING REQUIREMENTS OF SECTIONS 1012.32, 1012.465, 1012.467 AND 435.04, FLORIDA STATUTES.

_____
(Signature)

Sworn to and subscribed before me this _____ day of _____, 20___.

Personally known _____

OR Produced Identification _____

Notary Public – State of _____

_____
(Type of Identification)

My commission expires _____

_____
(Printed typed or stamped commissioned name of notary public)

SWORN STATEMENT PURSUANT TO SECTION 287.133(3)(A),
FLORIDA STATUTES, ON PUBLIC ENTITY CRIMES

THIS FORM MUST BE SIGNED AND SWORN TO IN THE PRESENCE OF A NOTARY PUBLIC OR OTHER OFFICIAL AUTHORIZED TO ADMINISTER OATHS.

1. This sworn statement is submitted to _____
(print name of the public entity)

by _____
(print individual's name and title)

for _____
(print name of entity submitting sworn statement)

whose business address is _____
_____

and (if applicable) its Federal Employer Identification Number (FEIN) is _____

(If the entity has no FEIN, include the Social Security Number of the individual signing

this sworn statement: _____.)

2. I understand that a "public entity crime" as defined in Paragraph 287.133(1)(g), **Florida Statutes,** means a violation of any state or federal law by a person with respect to and directly related to the transaction of business with any public entity or with an agency or political subdivision of any other state or of the United States, including, but not limited to, any bid or contract for goods or services to be provided to any public entity or an agency or political subdivision of any other state or of the United States and involving antitrust, fraud, theft, bribery, collusion, racketeering, conspiracy, or material misrepresentation.

3. I understand that "convicted" or "conviction" as defined in Paragraph 287.133(1)(b), **Florida Statutes,** means a finding of guilt or a conviction of a public entity crime, with or without an adjudication of guilt, in any federal or state trial court of record relating to charges brought by indictment or information after July 1, 1989, as a result of a jury verdict, nonjury trial, or entry of a plea of guilty or nolo contendere.

4. I understand that an "affiliate" as defined in Paragraph 287.133(1)(a), **Florida Statutes,** means:

   1. A predecessor or successor of a person convicted of a public entity crime; or

   2. An entity under the control of any natural person who is active in the management of the entity and who has been convicted of a public entity crime. The term "affiliate" includes those officers, directors, executives, partners, shareholders, employees, members, and agents who are active in the interest in another person, or a pooling of equipment or income among persons when not for fair market value under an arm's length agreement, shall be a prima facie case that one person controls another person. A person who knowingly enters into a joint venture with a person who has been convicted of a public entity crime in Florida during the preceding 36 months shall be considered an affiliate.

5. I understand that a "person" as defined in Paragraph 287.133(1)(e), **Florida Statutes,** means any natural person or entity organized under the laws of any state or of the United States with the legal power to enter into a binding contract and which bids or applies to bid on contracts for the provision of goods or services let by a public entity, or which otherwise transacts or applies to transact business with a public entity. The term "person" includes those officers, directors, executives, partners, shareholders, employees, members, and agents who are active in management of an entity.

6. Based on information and belief, the statement which I have marked below is true in relation to the entity submitting this sworn statement. **(Indicate which statement applies.)**

_____ Neither the entity submitting this sworn statement, nor any of its officers, directors, executives, partners, shareholders, employees, members, or agents who are active in the management of the entity, nor any affiliate of the entity has been charged with and convicted of a public entity crime subsequent of July 1, 1989.

_____ The entity submitting this sworn statement, or one or more of its officers, directors, executives, partners, shareholders, employees, members, or agents who management of the entity, or an affiliate of the entity has been charged with and convicted of a public entity crime subsequent to July 1, 1989.

_____ The entity submitting this sworn statement, or one or more of its officers, directors, executives, partners, shareholders, employees, members, or agents who are active in the management of the entity, or an affiliate of the entity has been charged with and convicted of a public entity crime subsequent to July 1, 1989. However, there has been a subsequent proceeding before a Hearing Officer of the State of Florida, Division of Administrative Hearings and the Final Order entered by the Hearing Officer determined that it was not in the public interest to place the entity submitting this sworn statement on the convicted vendor list. **(Attach a copy of the final order)**

I UNDERSTAND THAT THE SUBMISSION OF THIS FORM TO THE CONTRACTING OFFICER FOR THE PUBLIC ENTITY IDENTIFIED IN PARAGRAPH 1 (ONE) ABOVE IS FOR THAT PUBLIC ENTITY ONLY AND, THAT THIS FORM IS VALID THROUGH DECEMBER 31 OF THE CALENDAR YEAR IN WHICH IT IS FILED. I ALSO UNDERSTAND THAT I AM REQUIRED TO INFORM THE PUBLIC ENTITY PRIOR TO ENTERING INTO A CONTRACT IN EXCESS OF THE THRESHOLD AMOUNT PROVIDED IN SECTION 287.017, FLORIDA STATUTES FOR CATEGORY TWO OF ANY CHANGE IN THE INFORMATION CONTAINED IN THIS FORM.

_____
(signature)

_____
(date)

STATE OF _____

COUNTY OF _____

PERSONALLY APPEARED BEFORE ME, the undersigned authority,

_____ who, after first being sworn by me, affixed
(name of individual signing)

his/her signature in the space provided above on this _____ day of _____, 20_____.

_____
NOTARY PUBLIC

My commission expires:

Certification Regarding Debarment, Suspension, Ineligibility and Voluntary Exclusion - Lower Tier Covered Transactions

This certification is required by the Department of Education regulations implementing Executive Order 12549, Debarment and Suspension, 34 CFR Part 85, for all lower tier transactions meeting the threshold and tier requirements stated at Section 85.110.

1. By signing and submitting this proposal, the prospective lower tier participant is providing the certification set out below.

2. The certification in this clause is a material representation of fact upon which reliance was placed when this transaction was entered into. If it is later determined that the prospective lower tier participant knowingly rendered an erroneous certification, in addition to other remedies available to the Federal Government, the department or agency with which this transaction originated may pursue available remedies, including suspension and/or debarment.

3. The prospective lower tier participant shall provide immediate written notice to the person to whom this proposal is submitted if at any time the prospective lower tier participant learns that its certification was erroneous when submitted or has become erroneous by reason of changed circumstances.

4. The terms "covered transaction," "debarred," "suspended," "ineligible," "lower tier covered transaction," "participant," "person," "primary covered transaction," "principal," "proposal," and "voluntarily excluded," as used in this clause, have the meanings set out in the Definitions and Coverage sections of rules implementing Executive Order 12549. You may contact the person to which this proposal is submitted for assistance in obtaining a copy of those regulations.

5. The prospective lower tier participant agrees by submitting this proposal that, should the proposed covered transaction be entered into, it shall not knowingly enter into any lower tier covered transaction with a person who is debarred, suspended, declared ineligible, or voluntarily excluded from participation in this covered transaction, unless authorized by the department or agency with which this transaction originated.

6. The prospective lower tier participant further agrees by submitting this proposal that it will include the clause titled "Certification Regarding Debarment, Suspension, Ineligibility, and Voluntary Exclusion - Lower Tier Covered Transactions," without modification, in all lower tier covered transactions and in all solicitations for lower tier covered transactions.

7. A participant in a covered transaction may rely upon a certification of a prospective participant in a lower tier covered transaction that it is not debarred, suspended, ineligible, or voluntarily excluded from the covered transaction, unless it knows that the certification is erroneous. A participant may decide the method and frequency by which it determines the eligibility of its principals. Each participant may, but is not required to, check the Nonprocurement List.

8. Nothing contained in the foregoing shall be construed to require establishment of a system of records in order to render in good faith the certification required by this clause. The knowledge and information of a participant is not required to exceed that which is normally possessed by a prudent person in the ordinary course of business dealings.

9. Except for transactions authorized under paragraph 5 of these instructions, if a participant in a covered transaction knowingly enters into a lower tier covered transaction with a person who is suspended, debarred, ineligible, or voluntarily excluded from participation in this transaction, in addition to other remedies available to the Federal Government, the department or agency with which this transaction originated may pursue available remedies, including suspension and/or debarment.

Instructions for Certification:

1. The prospective lower tier participant certifies, by submission of this proposal that neither it nor its principals are:

   (a) presently debarred, suspended, proposed for debarment, declared ineligible, or voluntarily excluded from participation in this transaction by any Federal department or agency;
   (b) have not within a three-year period preceding this application been convicted of or had a civil judgment rendered against them for commission of fraud or a criminal offense in performing a public (federal, state or local) transaction or contract under a public transaction; or for violation of federal or state antitrust statutes or commission of embezzlement, theft, forgery, bribery, falsification or destruction of records, making false statements or receiving stolen property;
   (c) are not presently indicted for or otherwise criminally or civilly charged by a government entity (federal, state or local) with commission of the offenses enumerated in this certification; or
   (d) have not within a three-year period preceding this application had one or more public transaction (federal, state or local) terminated for cause or default.

2. Where the prospective lower tier participant is unable to certify to any of the statements in this certification, such prospective participant shall attach an explanation to this proposal.

Name of Applicant	PR/Award Number and/or Project Name
Printed Name	Title of Authorized Representative
Signature	Date

DRUG FREE WORKPLACE CERTIFICATION FORM

In accordance with Florida statute 287.087, preference shall be given to businesses with drug-free workplace programs. Whenever two or more bids, which are equal with respect to price, quality, and service, are received by the state or by any political subdivision for the procurement of commodities or contractual services, a bid received from a business that certifies that it has implemented a drug-free workplace program *shall be given preference* in the award process. Established procedures for processing tie bids will be followed if none of the tied vendors have a drug-free workplace program. In order to have a drug-free program, a business shall:

1) Publish a statement notifying employees that the unlawful manufacture, distribution, dispensing, possession, or use of a controlled substance is prohibited in the workplace and specifying the action that will be taken against employees for violations of such prohibition.

2) Inform employees about the dangers of drug abuse in the workplace, the business's policy of maintaining a drug-free workplace, any available drug counseling, rehabilitation, and employee assistance programs, and the penalties that may be imposed upon employees for drug abuse violations.

3) Give each employee engaged in providing the commodities or contractual services that are under bid a copy of the statement specified in subsection (1).

4) In the statement specified in subsection (1), notify the employees that, as a condition of working on the commodities or contractual services that are under bid, the employee will abide by the terms of the statement and will notify the employer of any conviction of, or plea of guilty or nolo contendere to, any violation of chapter 893 or of nay controlled substance law of the United States or any state, for a violation occurring in the workplace no later than five (5) days after such conviction.

5) Impose a sanction on, or require the satisfactory participation in a drug abuse assistance or rehabilitation program if such is available in the employee's community, by any employee who is so convicted.

6) Make a good faith effort to continue to maintain a drug-free workplace through implementation of this section.

As the person authorized to sign the statement, I certify that this firm complies fully with the above requirements.

_____

(Vendor's Signature)

St. Johns County School District
E-Verify Requirements

A. Pursuant to Section 448.095, Florida Statutes, Contractor shall register with and use the U.S. Department of Homeland Security's E-Verify system to verify the work authorization status of all employees hired during the term of this Agreement and must, upon request, provide evidence of compliance with this provision.

B. Subcontractors

1. Contractor shall also require all subcontractors performing work under this Agreement to use the E-Verify system for any employees they may hire during the term of this Agreement.

2. Subcontractors shall provide Contractor with an affidavit stating the subcontractor does not employ, contract with, or subcontract with an unauthorized alien, as stated in Section 448.095, Florida Statutes.

3. Contractor shall provide a copy of such affidavit to the School Board upon receipt and shall maintain a copy for the duration of the Agreement.

C. Failure to comply with this provision is a material breach of the Agreement, and School Board may choose to terminate the Agreement at its sole discretion. Contractor may be liable for all costs associated with School Board securing the same services, inclusive, but not limited to, higher costs for the same services.

D. It is the responsibility of the vendor/contractor to insure compliance with E-verify requirements (as applicable). To enroll in E-Verify, employers should visit the E-Verify website (http://www.uscis.gov/e-verify) and follow the instructions. The employer must retain the I-9 Forms for inspection. By affixing your signature below you hereby affirm that you will comply with E-Verify requirements.

Federal Employer Identification Number (FEIN): _____

Name of Firm: _____

Address: _____

Signature of Authorized Representative: _____

Print Name of Authorized Representative: _____

AIA® Document A312™ – 2010

Performance Bond

CONTRACTOR:
(Name, legal status and address)

SURETY:
(Name, legal status and principal place of business)

OWNER:
(Name, legal status and address)

SAMPLE

CONSTRUCTION CONTRACT
Date:
Amount: $
Description:
(Name and location)

BOND
Date:
(Not earlier than Construction Contract Date)

Amount: $
Modifications to this Bond: ☐ None ☐ See Section 16

CONTRACTOR AS PRINCIPAL
Company: *(Corporate Seal)*

Signature: _____
Name and Title:

SURETY
Company: *(Corporate Seal)*

Signature: _____
Name and Title:

(Any additional signatures appear on the last page of this Performance Bond.)

(FOR INFORMATION ONLY — Name, address and telephone)
AGENT or **BROKER:**

OWNER'S REPRESENTATIVE:
(Architect, Engineer or other party:)

ADDITIONS AND DELETIONS:
The author of this document has added information needed for its completion. The author may also have revised the text of the original AIA standard form. An *Additions and Deletions Report* that notes added information as well as revisions to the standard form text is available from the author and should be reviewed. A vertical line in the left margin of this document indicates where the author has added necessary information and where the author has added to or deleted from the original AIA text.

This document has important legal consequences. Consultation with an attorney is encouraged with respect to its completion or modification.

Any singular reference to Contractor, Surety, Owner or other party shall be considered plural where applicable.

Init.
/

AIA Document A312™ – 2010 Performance Bond. The American Institute of Architects. **All rights reserved. WARNING:** This AIA® Document is protected by U.S. Copyright Law and International Treaties. Unauthorized reproduction or distribution of this AIA® Document, or any portion of it, may result in severe civil and criminal penalties, and will be prosecuted to the maximum extent possible under the law. This document was produced by AIA software at 08:01:40 on 08/16/2010 under Order No.1502223060_1 which expires on 02/03/2011, and is not for resale.
User Notes: (1733324358)

AIA Document A312™ – 2010 Performance Bond. The American Institute of Architects. All rights reserved. WARNING: This AIA® Document is protected by U.S. Copyright Law and International Treaties. Unauthorized reproduction or distribution of this AIA® Document, or any portion of it, may result in severe civil and criminal penalties, and will be prosecuted to the maximum extent possible under the law. This document was produced by AIA software at 08:01:40 on 06/16/2010 under Order No.1502223060_1 which expires on 02/03/2011, and is not for resale.
User Notes:

(1733324358)

§ 1 The Contractor and Surety, jointly and severally, bind themselves, their heirs, executors, administrators, successors and assigns to the Owner for the performance of the Construction Contract, which is incorporated herein by reference.

§ 2 If the Contractor performs the Construction Contract, the Surety and the Contractor shall have no obligation under this Bond, except when applicable to participate in a conference as provided in Section 3.

§ 3 If there is no Owner Default under the Construction Contract, the Surety's obligation under this Bond shall arise after

.1 the Owner first provides notice to the Contractor and the Surety that the Owner is considering declaring a Contractor Default. Such notice shall indicate whether the Owner is requesting a conference among the Owner, Contractor and Surety to discuss the Contractor's performance. If the Owner does not request a conference, the Surety may, within five (5) business days after receipt of the Owner's notice, request such a conference. If the Surety timely requests a conference, the Owner shall attend. Unless the Owner agrees otherwise, any conference requested under this Section 3.1 shall be held within ten (10) business days of the Surety's receipt of the Owner's notice. If the Owner, the Contractor and the Surety agree, the Contractor shall be allowed a reasonable time to perform the Construction Contract, but such an agreement shall not waive the Owner's right, if any, subsequently to declare a Contractor Default;

.2 the Owner declares a Contractor Default, terminates the Construction Contract and notifies the Surety; and

.3 the Owner has agreed to pay the Balance of the Contract Price in accordance with the terms of the Construction Contract to the Surety or to a contractor selected to perform the Construction Contract.

§ 4 Failure on the part of the Owner to comply with the notice requirement in Section 3.1 shall not constitute a failure to comply with a condition precedent to the Surety's obligations, or release the Surety from its obligations, except to the extent the Surety demonstrates actual prejudice.

§ 5 When the Owner has satisfied the conditions of Section 3, the Surety shall promptly and at the Surety's expense take one of the following actions:

§ 5.1 Arrange for the Contractor, with the consent of the Owner, to perform and complete the Construction Contract;

§ 5.2 Undertake to perform and complete the Construction Contract itself, through its agents or independent contractors;

§ 5.3 Obtain bids or negotiated proposals from qualified contractors acceptable to the Owner for a contract for performance and completion of the Construction Contract, arrange for a contract to be prepared for execution by the Owner and a contractor selected with the Owner's concurrence, to be secured with performance and payment bonds executed by a qualified surety equivalent to the bonds issued on the Construction Contract, and pay to the Owner the amount of damages as described in Section 7 in excess of the Balance of the Contract Price incurred by the Owner as a result of the Contractor Default; or

§ 5.4 Waive its right to perform and complete, arrange for completion, or obtain a new contractor and with reasonable promptness under the circumstances:

.1 After investigation, determine the amount for which it may be liable to the Owner and, as soon as practicable after the amount is determined, make payment to the Owner; or

.2 Deny liability in whole or in part and notify the Owner, citing the reasons for denial.

§ 6 If the Surety does not proceed as provided in Section 5 with reasonable promptness, the Surety shall be deemed to be in default on this Bond seven days after receipt of an additional written notice from the Owner to the Surety demanding that the Surety perform its obligations under this Bond, and the Owner shall be entitled to enforce any remedy available to the Owner. If the Surety proceeds as provided in Section 5.4, and the Owner refuses the payment or the Surety has denied liability, in whole or in part, without further notice the Owner shall be entitled to enforce any remedy available to the Owner.

AIA Document A312™ – 2010 Performance Bond. The American Institute of Architects. All rights reserved. WARNING: This AIA® Document is protected by U.S. Copyright Law and International Treaties. Unauthorized reproduction or distribution of this AIA® Document, or any portion of it, may result in severe civil and criminal penalties, and will be prosecuted to the maximum extent possible under the law. This document was produced by AIA software at 08:01:40 on 06/16/2010 under Order No.1502223060_1 which expires on 02/03/2011, and is not for resale.
User Notes:

(1733324358)

§ 7 If the Surety elects to act under Section 5.1, 5.2 or 5.3, then the responsibilities of the Surety to the Owner shall not be greater than those of the Contractor under the Construction Contract, and the responsibilities of the Owner to the Surety shall not be greater than those of the Owner under the Construction Contract. Subject to the commitment by the Owner to pay the Balance of the Contract Price, the Surety is obligated, without duplication, for

.1 the responsibilities of the Contractor for correction of defective work and completion of the Construction Contract;

.2 additional legal, design professional and delay costs resulting from the Contractor's Default, and resulting from the actions or failure to act of the Surety under Section 5; and

.3 liquidated damages, or if no liquidated damages are specified in the Construction Contract, actual damages caused by delayed performance or non-performance of the Contractor.

§ 8 If the Surety elects to act under Section 5.1, 5.3 or 5.4, the Surety's liability is limited to the amount of this Bond.

§ 9 The Surety shall not be liable to the Owner or others for obligations of the Contractor that are unrelated to the Construction Contract, and the Balance of the Contract Price shall not be reduced or set off on account of any such unrelated obligations. No right of action shall accrue on this Bond to any person or entity other than the Owner or its heirs, executors, administrators, successors and assigns.

§ 10 The Surety hereby waives notice of any change, including changes of time, to the Construction Contract or to related subcontracts, purchase orders and other obligations.

§ 11 Any proceeding, legal or equitable, under this Bond may be instituted in any court of competent jurisdiction in the location in which the work or part of the work is located and shall be instituted within two years after a declaration of Contractor Default or within two years after the Contractor ceased working or within two years after the Surety refuses or fails to perform its obligations under this Bond, whichever occurs first. If the provisions of this Paragraph are void or prohibited by law, the minimum period of limitation available to sureties as a defense in the jurisdiction of the suit shall be applicable.

§ 12 Notice to the Surety, the Owner or the Contractor shall be mailed or delivered to the address shown on the page on which their signature appears.

§ 13 When this Bond has been furnished to comply with a statutory or other legal requirement in the location where the construction was to be performed, any provision in this Bond conflicting with said statutory or legal requirement shall be deemed deleted herefrom and provisions conforming to such statutory or other legal requirement shall be deemed incorporated herein. When so furnished, the intent is that this Bond shall be construed as a statutory bond and not as a common law bond.

§ 14 Definitions

§ 14.1 Balance of the Contract Price. The total amount payable by the Owner to the Contractor under the Construction Contract after all proper adjustments have been made, including allowance to the Contractor of any amounts received or to be received by the Owner in settlement of insurance or other claims for damages to which the Contractor is entitled, reduced by all valid and proper payments made to or on behalf of the Contractor under the Construction Contract.

§ 14.2 Construction Contract. The agreement between the Owner and Contractor identified on the cover page, including all Contract Documents and changes made to the agreement and the Contract Documents.

§ 14.3 Contractor Default. Failure of the Contractor, which has not been remedied or waived, to perform or otherwise to comply with a material term of the Construction Contract.

§ 14.4 Owner Default. Failure of the Owner, which has not been remedied or waived, to pay the Contractor as required under the Construction Contract or to perform and complete or comply with the other material terms of the Construction Contract.

§ 14.5 Contract Documents. All the documents that comprise the agreement between the Owner and Contractor.

AIA Document A312™ – 2010 Performance Bond. The American Institute of Architects. All rights reserved. WARNING: This AIA® Document is protected by U.S. Copyright Law and International Treaties. Unauthorized reproduction or distribution of this AIA® Document, or any portion of it, may result in severe civil and criminal penalties, and will be prosecuted to the maximum extent possible under the law. This document was produced by AIA software at 08:01:40 on 06/16/2010 under Order No.1502223060_1 which expires on 02/03/2011, and is not for resale.
User Notes:

(1733324358)

§ **15** If this Bond is issued for an agreement between a Contractor and subcontractor, the term Contractor in this Bond shall be deemed to be Subcontractor and the term Owner shall be deemed to be Contractor.

§ **16** Modifications to this bond are as follows:

(Space is provided below for additional signatures of added parties, other than those appearing on the cover page.)

CONTRACTOR AS PRINCIPAL		**SURETY**	
Company:	*(Corporate Seal)*	Company:	*(Corporate Seal)*
Signature:		Signature:	
Name and Title:		Name and Title:	
Address:		Address:	

Init.

/

AIA Document A312™ – 2010 Performance Bond. The American Institute of Architects. **All rights reserved. WARNING: This AIA® Document is protected by U.S. Copyright Law and International Treaties. Unauthorized reproduction or distribution of this AIA® Document, or any portion of it, may result in severe civil and criminal penalties, and will be prosecuted to the maximum extent possible under the law.** This document was produced by AIA software at 08:01:40 on 06/16/2010 under Order No.1502223060_1 which expires on 02/03/2011, and is not for resale.

User Notes:

(1733324358)

AIA® Document A312™ – 2010

Payment Bond

CONTRACTOR:
(Name, legal status and address)

SURETY:
(Name, legal status and principal place of business)

OWNER:
(Name, legal status and address)

CONSTRUCTION CONTRACT
Date:
Amount: $
Description:
(Name and location)

SAMPLE

BOND
Date:
(Not earlier than Construction Contract Date)

Amount: $
Modifications to this Bond: ☐ None ☐ See Section 18

CONTRACTOR AS PRINCIPAL
Company: *(Corporate Seal)*

Signature: _____
Name and Title:

SURETY
Company: *(Corporate Seal)*

Signature: _____
Name and Title:

(Any additional signatures appear on the last page of this Payment Bond.)

(FOR INFORMATION ONLY — Name, address and telephone)
AGENT or **BROKER:**

OWNER'S REPRESENTATIVE:
(Architect, Engineer or other party:)

ADDITIONS AND DELETIONS:
The author of this document has added information needed for its completion. The author may also have revised the text of the original AIA standard form. An *Additions and Deletions Report* that notes added information as well as revisions to the standard form text is available from the author and should be reviewed. A vertical line in the left margin of this document indicates where the author has added necessary information and where the author has added to or deleted from the original AIA text.

This document has important legal consequences. Consultation with an attorney is encouraged with respect to its completion or modification.

Any singular reference to Contractor, Surety, Owner or other party shall be considered plural where applicable.

Init. /

AIA Document A312™ – 2010 Payment Bond. The American Institute of Architects. **All rights reserved. WARNING: This AIA® Document is protected by U.S. Copyright Law and International Treaties. Unauthorized reproduction or distribution of this AIA® Document, or any portion of it, may result in severe civil and criminal penalties, and will be prosecuted to the maximum extent possible under the law.** This document was produced by AIA software at 08:00:46 on 06/16/2010 under Order No.1502223060_1 which expires on 02/03/2011, and is not for resale.
User Notes: (1246124132)

§ 1 The Contractor and Surety, jointly and severally, bind themselves, their heirs, executors, administrators, successors and assigns to the Owner to pay for labor, materials and equipment furnished for use in the performance of the Construction Contract, which is incorporated herein by reference, subject to the following terms.

§ 2 If the Contractor promptly makes payment of all sums due to Claimants, and defends, indemnifies and holds harmless the Owner from claims, demands, liens or suits by any person or entity seeking payment for labor, materials or equipment furnished for use in the performance of the Construction Contract, then the Surety and the Contractor shall have no obligation under this Bond.

§ 3 If there is no Owner Default under the Construction Contract, the Surety's obligation to the Owner under this Bond shall arise after the Owner has promptly notified the Contractor and the Surety (at the address described in Section 13) of claims, demands, liens or suits against the Owner or the Owner's property by any person or entity seeking payment for labor, materials or equipment furnished for use in the performance of the Construction Contract and tendered defense of such claims, demands, liens or suits to the Contractor and the Surety.

§ 4 When the Owner has satisfied the conditions in Section 3, the Surety shall promptly and at the Surety's expense defend, indemnify and hold harmless the Owner against a duly tendered claim, demand, lien or suit.

§ 5 The Surety's obligations to a Claimant under this Bond shall arise after the following:

§ 5.1 Claimants, who do not have a direct contract with the Contractor,

.1 have furnished a written notice of non-payment to the Contractor, stating with substantial accuracy the amount claimed and the name of the party to whom the materials were, or equipment was, furnished or supplied or for whom the labor was done or performed, within ninety (90) days after having last performed labor or last furnished materials or equipment included in the Claim; and

.2 have sent a Claim to the Surety (at the address described in Section 13).

§ 5.2 Claimants, who are employed by or have a direct contract with the Contractor, have sent a Claim to the Surety (at the address described in Section 13).

§ 6 If a notice of non-payment required by Section 5.1.1 is given by the Owner to the Contractor, that is sufficient to satisfy a Claimant's obligation to furnish a written notice of non-payment under Section 5.1.1.

§ 7 When a Claimant has satisfied the conditions of Sections 5.1 or 5.2, whichever is applicable, the Surety shall promptly and at the Surety's expense take the following actions:

§ 7.1 Send an answer to the Claimant, with a copy to the Owner, within sixty (60) days after receipt of the Claim, stating the amounts that are undisputed and the basis for challenging any amounts that are disputed; and

§ 7.2 Pay or arrange for payment of any undisputed amounts.

§ 7.3 The Surety's failure to discharge its obligations under Section 7.1 or Section 7.2 shall not be deemed to constitute a waiver of defenses the Surety or Contractor may have or acquire as to a Claim, except as to undisputed amounts for which the Surety and Claimant have reached agreement. If, however, the Surety fails to discharge its obligations under Section 7.1 or Section 7.2, the Surety shall indemnify the Claimant for the reasonable attorney's fees the Claimant incurs thereafter to recover any sums found to be due and owing to the Claimant.

§ 8 The Surety's total obligation shall not exceed the amount of this Bond, plus the amount of reasonable attorney's fees provided under Section 7.3, and the amount of this Bond shall be credited for any payments made in good faith by the Surety.

§ 9 Amounts owed by the Owner to the Contractor under the Construction Contract shall be used for the performance of the Construction Contract and to satisfy claims, if any, under any construction performance bond. By the Contractor furnishing and the Owner accepting this Bond, they agree that all funds earned by the Contractor in the performance of the Construction Contract are dedicated to satisfy obligations of the Contractor and Surety under this Bond, subject to the Owner's priority to use the funds for the completion of the work.

AIA Document A312™ – 2010 Payment Bond. The American Institute of Architects. All rights reserved. WARNING: This AIA® Document is protected by U.S. Copyright Law and International Treaties. Unauthorized reproduction or distribution of this AIA® Document, or any portion of it, may result in severe civil and criminal penalties, and will be prosecuted to the maximum extent possible under the law. This document was produced by AIA software at 08:00:46 on 06/16/2010 under Order No.1502223060_1 which expires on 02/03/2011, and is not for resale.
User Notes:

(1246124132)

§ 10 The Surety shall not be liable to the Owner, Claimants or others for obligations of the Contractor that are unrelated to the Construction Contract. The Owner shall not be liable for the payment of any costs or expenses of any Claimant under this Bond, and shall have under this Bond no obligation to make payments to, or give notice on behalf of, Claimants or otherwise have any obligations to Claimants under this Bond.

§ 11 The Surety hereby waives notice of any change, including changes of time, to the Construction Contract or to related subcontracts, purchase orders and other obligations.

§ 12 No suit or action shall be commenced by a Claimant under this Bond other than in a court of competent jurisdiction in the state in which the project that is the subject of the Construction Contract is located or after the expiration of one year from the date (1) on which the Claimant sent a Claim to the Surety pursuant to Section 5.1.2 or 5.2, or (2) on which the last labor or service was performed by anyone or the last materials or equipment were furnished by anyone under the Construction Contract, whichever of (1) or (2) first occurs. If the provisions of this Paragraph are void or prohibited by law, the minimum period of limitation available to sureties as a defense in the jurisdiction of the suit shall be applicable.

§ 13 Notice and Claims to the Surety, the Owner or the Contractor shall be mailed or delivered to the address shown on the page on which their signature appears. Actual receipt of notice or Claims, however accomplished, shall be sufficient compliance as of the date received.

§ 14 When this Bond has been furnished to comply with a statutory or other legal requirement in the location where the construction was to be performed, any provision in this Bond conflicting with said statutory or legal requirement shall be deemed deleted herefrom and provisions conforming to such statutory or other legal requirement shall be deemed incorporated herein. When so furnished, the intent is that this Bond shall be construed as a statutory bond and not as a common law bond.

§ 15 Upon request by any person or entity appearing to be a potential beneficiary of this Bond, the Contractor and Owner shall promptly furnish a copy of this Bond or shall permit a copy to be made.

§ 16 Definitions

§ 16.1 Claim. A written statement by the Claimant including at a minimum:

.1 the name of the Claimant;
.2 the name of the person for whom the labor was done, or materials or equipment furnished;
.3 a copy of the agreement or purchase order pursuant to which labor, materials or equipment was furnished for use in the performance of the Construction Contract;
.4 a brief description of the labor, materials or equipment furnished;
.5 the date on which the Claimant last performed labor or last furnished materials or equipment for use in the performance of the Construction Contract;
.6 the total amount earned by the Claimant for labor, materials or equipment furnished as of the date of the Claim;
.7 the total amount of previous payments received by the Claimant; and
.8 the total amount due and unpaid to the Claimant for labor, materials or equipment furnished as of the date of the Claim.

§ 16.2 Claimant. An individual or entity having a direct contract with the Contractor or with a subcontractor of the Contractor to furnish labor, materials or equipment for use in the performance of the Construction Contract. The term Claimant also includes any individual or entity that has rightfully asserted a claim under an applicable mechanic's lien or similar statute against the real property upon which the Project is located. The intent of this Bond shall be to include without limitation in the terms "labor, materials or equipment" that part of water, gas, power, light, heat, oil, gasoline, telephone service or rental equipment used in the Construction Contract, architectural and engineering services required for performance of the work of the Contractor and the Contractor's subcontractors, and all other items for which a mechanic's lien may be asserted in the jurisdiction where the labor, materials or equipment were furnished.

§ 16.3 Construction Contract. The agreement between the Owner and Contractor identified on the cover page, including all Contract Documents and all changes made to the agreement and the Contract Documents.

AIA Document A312™ – 2010 Payment Bond. The American Institute of Architects. **All rights reserved. WARNING:** This AIA® Document is protected by U.S. Copyright Law and International Treaties. Unauthorized reproduction or distribution of this AIA® Document, or any portion of it, may result in severe civil and criminal penalties, and will be prosecuted to the maximum extent possible under the law. This document was produced by AIA software at 08:00:46 on 06/16/2010 under Order No.1502223060_1 which expires on 02/03/2011, and is not for resale.
User Notes: (1246124132)

§ 16.4 Owner Default. Failure of the Owner, which has not been remedied or waived, to pay the Contractor as required under the Construction Contract or to perform and complete or comply with the other material terms of the Construction Contract.

§ 16.5 Contract Documents. All the documents that comprise the agreement between the Owner and Contractor.

§ 17 If this Bond is issued for an agreement between a Contractor and subcontractor, the term Contractor in this Bond shall be deemed to be Subcontractor and the term Owner shall be deemed to be Contractor.

§ 18 Modifications to this bond are as follows:

(Space is provided below for additional signatures of added parties, other than those appearing on the cover page.)

CONTRACTOR AS PRINCIPAL		**SURETY**	
Company:	*(Corporate Seal)*	Company:	*(Corporate Seal)*
Signature:		Signature:	
Name and Title:		Name and Title:	
Address:		Address:	

Init.

/

AIA Document A312™ – 2010 Payment Bond. The American Institute of Architects. All rights reserved. WARNING: This AIA® Document is protected by U.S. Copyright Law and International Treaties. Unauthorized reproduction or distribution of this AIA® Document, or any portion of it, may result in severe civil and criminal penalties, and will be prosecuted to the maximum extent possible under the law. This document was produced by AIA software at 08:00:46 on 06/16/2010 under Order No.1502223060_1 which expires on 02/03/2011, and is not for resale.
User Notes:

(1246124132)

OWNER-CONTRACTOR AGREEMENT
Bid # 2020-35

THIS AGREEMENT, in four (4) copies, made this **Thirteenth (13)** day of **April 2021**, by and between the **St. Johns County School Board** (herein referred to as the "Owner"), whose mailing address is **Executive Director for Facilities & Operations, 40 Orange Street, St. Augustine, Florida 32084** and (herein referred to as the "Contractor"), whose mailing address is . All correspondence, submittals, and notices relating to or required under this Contract shall be sent in writing to the above addresses; unless either party is notified in writing by the other, of a change in address.

WITNESSETH:

WHEREAS, it is the intent of the Owner to obtain the services of the Contractor in connection with the construction of the **Roof Replacement and Repairs Building B, First Coast Technical College** hereinafter referred to as the "Project" or the "Work"; and

WHEREAS, the Contractor desires to perform such construction on the Project in accordance with the terms and conditions of this Agreement,

NOW, THEREFORE, in consideration of the promises made herein and other good and valuable consideration, the following terms and conditions are hereby mutually agreed to, by and between the Owner and Contractor:

Article 1

DEFINITIONS

1.1 All terms in this Agreement which are defined in the Information for Bidders and the General Conditions shall have the meanings designated therein.

1.2 The Contract Documents are as defined in the General Conditions. Such documents form the Contract, and all are as fully a part hereof as if attached to this Agreement or repeated herein.

Article 2

STATEMENT OF THE WORK

2.1 The Contractor shall provide and pay for all materials, tools, equipment, labor and professional and non-professional services, and shall perform all other acts and supply all other things necessary, to fully and properly perform and complete the Work, as required by the Contract Documents, including the provision of all required warranties and related warranty services.

2.2 The Contractor shall further provide and pay for all related facilities described in any of the Contract Documents, including all work expressly specified therein and such additional work as may be reasonably inferred therefrom, saving and excepting only such items of work as are specifically stated in the Contract Documents not to be the obligation of the Contractor. The totality of the obligations imposed upon the Contractor by this Article and by all other provisions of the Contract Documents, as well as the structures to be built and the labor to be performed, is herein referred to as the "Work".

Article 3

DESIGN CONSULTANT

3.1 The Design Consultant (as defined in the General Conditions) shall be **A/R/C Associates, Incorporated**, whose address is 601 North Fern Creek Avenue, Suite 100, Orlando, Florida 32803 provided, however, that the Owner may, without liability to the Contractor, unilaterally amend this Article from time to time by designating a different person or organization to act as its Design Consultant and so advising the Contractor in writing, at which time the person or organization so designated shall be the Design Consultant for purposes of this Contract.

Article 4

TIME OF COMMENCEMENT AND COMPLETION

4.1 The Contractor shall receive a Letter of Intent following approval of this Agreement by the St. Johns County School Board on **Tuesday, April 13, 2021**, following which the Contractor shall beginning planning and preparation of submittals for review by the Owner. For this project, the Notice to Proceed and the Date of Commencement of the Work shall be **Wednesday, April 14, 2021** (pending receipt of all required administrative data, i.e., bonds, licenses, schedule, insurance, etc.). Actual construction may start on-site on **Thursday, April 15, 2021.**

4.2 Time is of the essence. The Contractor shall achieve Substantial Completion, as defined in the General Conditions, by the date of **Monday, June 14, 2021**. This time period from Notice to Proceed until this date shall be designated the Contract Time.

4.3 The Contractor shall also achieve Final Completion, as defined in the General Conditions, by the date of **Tuesday, July 13, 2021**. This time period from Substantial Completion until this date shall be designated the “Close-out” Time.

4.4 Should the Contractor fail to substantially complete the Work on or before the date stipulated as a Milestone Date in Article 4.3 above, or for Substantial Completion (or such later date as may result from a written extension of time granted by the Owner), he shall pay the Owner, as liquidated damages, the sum of **five hundred dollars ($500.00)** for each consecutive calendar day that terms of the Contract remain unfulfilled beyond the date allowed by the Contract, which sum is agreed upon as a reasonable and proper measure of damages which the Owner will sustain per day by failure of the Contractor to complete within time as stipulated; it being recognized by the Owner and the Contractor

that the injury to the Owner which could result from a failure of the Contractor to complete on schedule is uncertain and cannot be computed exactly. In no way shall cost for liquidated damages be construed as a penalty on the Contractor.

4.5 For each consecutive calendar day that the Work remains incomplete after the date established for Final Completion, the Owner will retain from the compensation otherwise to be paid to the Contractor the sum of **five hundred dollars ($500.00)**. This amount is the minimum measure of damages the Owner will sustain as a failure of the Contractor to complete all remedial work, correct deficient work, clean up the Project and other miscellaneous tasks as required to complete all work specified. This amount is in addition to the liquidated damages prescribed above and represents compensation for additional costs the Owner could incur or suffer caused by on-going construction while school may or may not be in progress. Such costs include, but are not limited to, additional security and safety measures for students, employee overtime, split shift for school, additional busing, meals prepared off-site and insurance and like costs.

4.6 The amount of liquidated damages set forth in Articles 4.4 and 4.5 hereinabove shall be assessed cumulatively so long as Substantial Completion has not occurred. Once Substantial Completion has occurred, then only the liquidated damages set forth in Article 4.5 shall be assessed. The items of cost included in the assessment of liquidated damages are as defined in the General Conditions.

Article 5

CONTRACT SUM

5.1 Provided that the Contractor shall strictly and completely perform all of its obligations under the Contract Documents, and subject only to additions and deductions by Modification or as otherwise provided in the Contract Documents, the Owner shall pay to the Contractor, in current funds and at the time and in the installments hereinafter specified, the sum of Dollars (**$**) herein referred to as the "Contract Sum or Contract Price".

5.2 The above “Contract Sum” includes unit price allowances as follows:

Unit Price “A”: Cost per lineal foot to remove any existing deteriorated wood blocking and/or fascia along roof edge or within roof system or accessories and replace with new 2 x 4 pressure treated wood blocking per Section 06100. The exact locations and extent of replacement to be determined in the field by the Owner and Architect. Base bid shall include the replacement of One hundred (100) lineal feet of pressure treated wood blocking and/or fascia at a cost of $ _____ per lineal foot.

Unit Price “B”: Cost per square foot to remove any existing deteriorated plywood sheathing within mansard roof system and replace with new 5/8” pressure treated plywood sheathing per Section 06100. The exact locations and extent of replacement to be determined in the field by the Owner and Architect. Base Bid shall include the replacement of Sixty-Four (64) square feet of pressure treated plywood sheathing at a cost of $ _____ per square foot.

Unit Price "C": Cost per square foot to remove existing deteriorated lightweight insulating concrete (LWIC) and replace with new LWIC patching compound, such as Siplast Zono-Patch (or equal), with a minimum compressive design strength of 300 psi at 28 days. Match existing LWIC manufacturer and product if possible, or utilize appropriate manufacturer recommended patching methods and material. The exact locations and extent of replacement is to be determined in the field by Owner and Architect. Base bid shall include the replacement of one hundred (100) square feet at 3" thickness of damaged lightweight insulating concrete. "Divot" repair as a result of existing roof tear-off is to be considered part of the base bid services, and not part of the unit price costs of $_____ per square foot.

Unit Price "D": Cost per linear foot to provide protective walk pads for rooftop maintenance traffic as approved by the manufacturer. Walk pads can be either those provided by the manufacturer, or an additional layer of single-ply membrane adhered to primary membrane as specified within section 07530. Walk pads to be 3 feet wide. Fully adhere to the finished roof system using the manufacturer approved mastic. Base bid shall include the replacement of two hundred (200) linear feet of walk pad application at a cost of $_____ per lineal foot.

Unit Price "E": Cost per square foot to remove and replace existing damaged and/defaced "lay-in" suspended acoustical ceiling tile to match size, type, manufacturer, and finish of the existing tile, which will need to be field verified by the contractor. The exact locations and extent of replacement to be determined in the field by the Owner and Architect. The base bid shall include removal and replacement of two hundred (200) square feet of damaged acoustic ceiling tiles. If this quantity is not used, the Owner shall receive a credit for the unused quantity based on the unit price. NOTE: Additional ceiling tile damaged during the course of construction by construction events shall be replaced at no additional cost to the Owner at a cost of
$_____ per square foot.

Article 6

PROGRESS PAYMENTS

6.1 The Contractor hereby agrees that on or about the First day of the month for every month during the performance of the Work he will deliver to the Design CONSULTANT an Application for Payment in accordance with the provisions of Article 9 of the General Conditions. This date may be changed upon mutual agreement, stated in writing, between the Owner and Contractor. Payment under this Contract shall be made as provided in the General Conditions.

Article 7

OTHER REQUIREMENTS

7.1 The Contractor shall submit the Performance Bond, Labor and Material Payment Bond and Certification of Insurance as required by the Contract Documents prior to the issuance of the Notice to Proceed.

7.2 The Owner shall furnish to the Contractor four (4) set(s) of drawings and four (4) set(s) of specifications, at no extra cost, for use in the Construction of the Work. Additional sets of drawings or specifications may be obtained by the Contractor by paying the Owner for the costs of reproduction, handling and mailing.

7.3 The Contractor shall perform at least fifteen percent (15%) of the total Work with forces that are in the direct employment of the Contractor's organization.

IN WITNESS WHEREOF, **St. Johns County School Board** (hereinafter called the "Owner") by resolution of its authorized body and directing the same and adopted at a regular meeting thereof, duly called and held in the County of **St. Johns, Florida** on Tuesday, the Thirteenth (13th) day of April, 2021, has caused these presents to be signed and its corporate seal to be hereunto affixed, attested by its (_____), and (_____) (hereinbefore called "Contractor") has caused these presents to be signed by its President and its Corporate seal to be hereunto affixed, as hereinafter attested, all as of the day and year first above written.

ST. JOHNS COUNTY SCHOOL BOARD

By: _____
Tim Forson

Its: ___Superintendent_____

(CONTRACTOR)

_____

Name: _____

Signature: _____

Title: _____

Attest: _____

(Seal)

END OF SECTION C
OWNER-CONTRACTOR AGREEMENT

GENERAL CONDITIONS OF THE
CONTRACT FOR CONSTRUCTION

INDEX

Article 1	Contract Documents
Article 2	The Design Consultant
Article 3	Owner
Article 4	Contractor
Article 5	Subcontractors
Article 6	Work by Owner or By Separate Contractors
Article 7	Miscellaneous Provisions
Article 8	Time
Article 9	Payments and Completion
Article 10	Protection of Persons and Property
Article 11	Insurance
Article 12	Changes in the Work
Article 13	Uncovering and Correction of Work
Article 14	Termination of the Contract

NOTICE OF DISCLAIMER

TAKE NOTICE, that these General Conditions may contain language and Article or Paragraph headings or names which appear similar to or the same as the provisions of the "General Conditions of the Contract for Construction", published by the American Institute of Design Consultants, AIA Document A-201.

TAKE NOTICE, however, that these General Conditions are substantially and materially different in many respects from the AIA Document A-201 and that certain additions, deletions or other modifications have been made to provisions similar to those contained in the AIA Document. This document, further, contains provisions which do not appear in the AIA document.

The use of any language or article or paragraph format similar to or the same as AIA Document A-201 does not constitute an endorsement by the American Institute of Architects of this document.

TABLE OF ARTICLES

1. CONTRACT DOCUMENTS
2. THE DESIGN CONSULTANT
3. OWNER
4. CONTRACTOR
5. SUBCONTRACTORS
6. WORK BY OWNER OR BY SEPARATE CONTRACTORS
7. MISCELLANEOUS PROVISIONS
8. TIME
9. PAYMENTS AND COMPLETION
10. PROTECTION OF PERSONS AND PROPERTY
11. INSURANCE
12. CHANGES IN THE WORK
13. UNCOVERING AND CORRECTION OF WORK
14. TERMINATION OF THE CONTRACT

ARTICLE 1

CONTRACT DOCUMENTS

1.1 DEFINITIONS

1.1.1 THE CONTRACT DOCUMENTS

The Contract Documents consist of the Owner-Contractor Agreement, the Conditions of the Contract (General, Supplementary and other Conditions), the Performance and Labor and Material Payment Bonds, Bid Bond, the Drawings, the Specifications, and all Addenda issued prior to and all Modifications issued after execution of the Contract. A Modification is (1) a written amendment to the Contract signed by both parties, (2) a Change Order issued pursuant to the provisions of Article 12.1, (3) a written order for a minor change in the Work issued by the Design Consultant pursuant to Paragraph 12.5. The Contract Documents include Bidding Documents such as the Advertisement or Invitation to Bid, the Instructions to Bidders, sample forms, the Contractor's Bid or portions of Addenda relating to any of these. The Contract Documents do not include any other documents including but not limited to soils, geotechnical or other reports, boundary or other surveys and analyses, which may be printed, bound or assembled with the Contract Documents, or otherwise made available to the Contractor for review or information under this Contract, unless specifically enumerated and expressly incorporated by reference in the Owner-Contractor Agreement.

1.1.1.1 The Drawings and Specifications referred to in the Contract Documents have been prepared by the **Design Consultant,** A/R/C Associates, Incorporated, 601 North Fern Creek Avenue, Suite 100, Orlando, Florida 32803 and are identified by as **"Roof Replacement and Repairs – Building B"** at **First Coast Technical College**.

1.1.2 THE CONTRACT

The Contract is the sum of all the Contract Documents. This Contract represents the entire and integrated agreement between the Owner and the Contractor and supersedes all prior negotiations, representations, or agreements, either written or oral. The Contract may be amended or modified only by a written Modification as defined in Subparagraph 1.1.1 and notwithstanding anything contained in the Contract Documents to the contrary; there can be no increase in the Contract Sum or Time without a fully executed change order.

1.1.3 THE WORK

The Work comprises the completed construction required by the Contract Documents and includes all incidental labor, supplies and other facilities or things reasonably necessary to produce such fully completed construction whether identified in the

Contract Documents or not, and all labor, materials, equipment, and supplies incorporated or to be incorporated in such construction.

1.1.4 THE PROJECT

The Project is the total construction of which the Work performed under the Contract Documents may be the whole or a part.

1.1.5 FURNISH, INSTALL, PROVIDE:

The terms "Furnish" or "Install" or "Provide", unless specifically limited in context, mean: Furnishing and incorporating a specified item, product or material in the work, including all necessary labor, materials, equipment to perform the work required, ready for use.

1.1.6 NOTICE

The term "Notice" as used herein shall mean written notice. Written notice shall be deemed to have been duly served when delivered to or at the last known business address of the person, firm or corporation for whom intended, or to his, their or its duly authorized agent, representative or officer; or when enclosed in a postage prepaid wrapper or envelope addressed to such person, firm or corporation at his, their or its last known business address and deposited in a United States mailbox.

1.1.7 MISCELLANEOUS WORDS OR TERMS

Whenever they refer to the work or its performance, "Directed", "Required", "Permitted", "Ordered", "Designated", "Prescribed", and words of like import shall imply the direction, requirements, permission, order, designation or prescription of the Owner, Construction Program Manager or Design Consultant, and "Approved", "Acceptable", "Satisfactory", "in the judgment of" and words of like import shall mean approved by or acceptable to or satisfactory to, in the judgment of the Owner.

1.1.8 BIDDER: Any individual, company, corporation, partnership, or joint venture who submits a Bid for work required as distinct from a sub-bidder who submits a Bid to a prime Bidder.

1.1.9 BIDDING DOCUMENTS: The Invitation to Bid, Contractor's Qualification Statement, Instructions to Bidders, Sample Forms, Proposal, Specifications, Drawings and Addenda issued prior to receipt of Bids.

1.1.10 DIRECTED, REQUIRED, ACCEPTABLE: When these words refer to work or its performance, "directed," "required," "permitted," "ordered," "designated," "prescribed," and words of like implication, mean "by direction of," "requirements of," "permission of," "order of," "designation of," or "prescription of" the Design Consultant. Likewise, "acceptable," "satisfactory," "in the judgment of," and words of like import, mean "recommended by," "acceptable to," "satisfactory to," or "in the judgment of" the Owner.

1.1.11 AS SHOWN, AS INDICATED, AS DETAILED: These words, and words of like implication, refer to information contained by drawings describing the work, unless explicitly stated otherwise in other Contract Documents.

1.1.12 MANUFACTURER: An individual, company, or corporation who manufactures, fabricates, or assembles a standard product. A standard product is one that is not made to special design, and if furnished by either direct sale or by contract to the Contractor, Subcontractor or Vendor.

1.1.13 MATERIAL SUPPLIER OR VENDOR: A person or organization who supplies, but who is not responsible for the installation of, materials, products and equipment of a standard nature that are not specifically fabricated for this particular Contract.

1.1.14 PLANS OR DRAWINGS: All drawings or reproduction of drawings pertaining to required work.

1.1.15 PRODUCT: The term 'product' includes materials, systems and equipment.

1.1.16 PROJECT MANUAL: The Project Manual includes the Bidding requirements, Conditions of Contract and the specifications. Not all documents bound in the Manual are necessarily Contract Documents as described in Paragraph 1.1.1.

1.1.17 PROPOSAL: A complete and properly signed document whereby a Bidder proposes to do the work or designated portion thereof for the sums stipulated therein, supported by data called for by the Bidding requirements.

1.1.18 PROVIDE: As a directive to the Contractor, "provide" means "furnish and install completely".

1.1.19 SPECIFICATIONS: Descriptions, provisions and requirements, pertaining to method and manner of performing work, or to quantities and qualities of materials to be furnished under terms of the Contract.

1.2 EXECUTION, CORRELATION AND INTENT

1.2.1 The Contract Documents shall be signed in not less than quadruplicate by the Owner and Contractor and each of which shall be deemed an original, but all of which shall constitute one and the same instrument. If either the Owner or the Contractor or both do not sign the Contract Documents, then they shall be as described in Paragraph 1.1.1 and shall be identified by the Construction Project Manager.

1.2.2 By executing the Contract, the Contractor represents that he has visited the site, familiarized himself with the local conditions under which the Work is to be performed, and correlated his observations with the requirements of the Contract Documents. Contractor further represents that all Design Drawings and Specifications contain some

minor errors and discrepancies. Such errors and discrepancies shall not form the basis of any claim by Contractor for defective design or breach of any implied warranties as to fitness of plans or specifications against Owner or Design Consultant.

1.2.3 The intent of the Contract Documents is to include all items necessary for the proper execution and completion of the Work. The Contract Documents are complementary, and what is required by any one shall be as binding as if required by all. Performance by the Contractor shall be required only to the extent consistent with the Contract Documents and reasonably inferable from them as being necessary to produce the intended results. Words and abbreviations which have well-known technical or trade meanings are used in the Contract Documents in accordance with such recognized meanings unless otherwise specifically defined herein. The table of contents, index, titles, headings, running headlines and marginal notes contained herein and in said documents are solely to facilitate reference to various provisions of the Contract Documents and in no way affect, limit or cast light upon the interpretation of the provisions to which they refer.

1.2.4 The organization of the Specifications into divisions, sections and articles, and the arrangement of Drawings is for clarity only, and shall not control the Contractor in dividing the work among Subcontractors or in establishing the extent of Work to be performed by any trade. The Contractor may sub-contract the Work in such divisions as he sees fit, so long as Contractor self-performs the required portion of the Work, and he is ultimately responsible for furnishing all work shown on the drawings and/or in the specifications.

1.2.5 Anything shown on the drawings and not mentioned in the specifications or mentioned in the specifications and not shown on the drawings shall have the same effect as if shown or mentioned respectively in both. Technical specifications take priority over general specifications and detail drawings take precedence over general drawings. Any work shown on one drawing shall be construed to be shown in all drawings and the Contractor will coordinate the work and the drawings. If any portion of the Contract Documents shall be in conflict with any other portion, the various documents comprising the Contract Documents shall govern in the following order of precedence: The Owner-Contractor Agreement; Modifications; Addenda; any Supplementary Conditions; the General Conditions; the Specifications; the Drawings; as between schedules and information given on Drawings, the schedules shall govern; as between figures given on Drawings and the scaled measurements, the figures shall govern; as between large-scale Drawings and small scale Drawings, the larger scale shall govern. Any such conflict or inconsistency between or in the drawings shall be submitted to the Design Consultant whose decision thereon shall be final and conclusive.

1.2.6 The Contractor agrees that nothing contained in the Contract Documents or any Contract between the Owner and the Construction Program Manager or the Owner and the Design Consultant shall create any Contractual relationship between the Construction Program Manager and the Contractor, the Design Consultant and the Contractor, the Design Consultant and the Construction Program Manager or between the Owner,

Design Consultant, and the Construction Program Manager and any Subcontractor or sub-Subcontractors. The Contractor acknowledges and agrees that this Contract is not intended to create, nor shall any provision be interpreted as creating, any Contractual relationship between the Owner or Contractor and any third parties, nor is it intended to create any third party beneficiaries unless expressly so stated in the Contract Documents.

1.2.7 The provisions of this Contract cannot be amended, modified, varied or waived by the Owner or its agents or representatives in any respect except by a Modification approved and executed by the **St. Johns County School Board**. The Contractor is hereby given notice that no person or entity has authority to orally waive, or to release the Contractor from any of the Contractor's duties or to alter obligations under or arising out of this Contract. Any waiver, approval or consent granted by Modification to the Contractor shall be limited to those matters specifically and expressly stated thereby to be waived, approved or consented to and shall not relieve the Contractor of the obligation to obtain any future waiver, approval or consent.

1.2.8 Any material or operation specified by reference to published specifications of a manufacturer, a society, an association, a code, or other published standard, shall comply with requirements of the listed document which is current on date of receipt of Bids. In case of a conflict between referenced document and Project specifications, Project specifications shall govern. In case of a conflict between referenced documents, the one having more stringent requirements, as determined by the Design Consultant, shall govern.

1.2.9 The Contractor, if requested, shall furnish an affidavit from manufacturer certifying that materials or products delivered to Project meet all of the requirements specified.

1.3 OWNERSHIP AND USE OF DOCUMENTS

1.3.1 All Drawings, Specifications and copies thereof furnished by the Design Consultant are and shall remain his property. They are to be used only with respect to this Project and are not to be used on any other Project. With the exception of one Contract set for each party to the Contract, such documents are to be returned or suitably accounted for to the Design Consultant on request at the completion of the Work. Submission or distribution to meet official regulatory requirements or for other purposes in connection with the Project is not to be construed as publication in derogation of the Design Consultant's common law copyright or other reserved rights.

1.3.1.1 The Contractor will be furnished with the following quantities of drawings and specifications free. (Refer to Article 7.2 of the Owner-Contractor Agreement).

END OF ARTICLE 1

ARTICLE 2

THE DESIGN CONSULTANT

2.1 DEFINITIONS

2.1.1 The terms "Design Consultant" or "A/E" or "Architect" or "Engineer" as used or set forth in the Contract Documents, shall mean the entity and its consulting firm or agencies, or their duly authorized representatives, that is responsible for designing or engineering the work, and performing the activities specified herein, as identified in the Owner-Contractor Agreement, including any consulting-engineers or Subcontractors to said entity or firm. Such firm or agency and its representatives shall act severally within the scope of particular duties entrusted to them, unless otherwise provided for in the Contract.

2.1.2 The Design Consultant is identified in the Owner-Contractor Agreement and is referred to throughout the Contract Documents as if singular in number and masculine in gender. The Design Consultant is further described as and, throughout this document, shall mean one or both of the following:

2.1.2.1 ARCHITECT, a person or other legal entity lawfully licensed to practice architecture in the state wherein the Project is located; or

2.1.2.2 ENGINEER, a person or other legal entity lawfully licensed to practice engineering in the state wherein the Project is located.

2.1.3 DESIGN CONSULTANT: A/R/C Associates, Incorporated, 601 North Fern Creek Avenue, Suite 100, Orlando, Florida 32803, Phone: 407-896-7875, Fax: 407-898-6043

2.2 SERVICES OF THE DESIGN CONSULTANT

2.2.1 The Design Consultant will provide certain services as hereinafter described.

2.2.2 Should errors, omissions, or conflicts in the Drawings, Specifications, or other Contract Documents prepared by the Design Consultant be discovered, the Design Consultant will prepare such amendments or supplementary documents and provide consultation as may be required.

2.2.3 The Design Consultant will visit the site at intervals appropriate to the stage of construction to familiarize itself generally with the progress and quality of the Work and to determine in general if the Work is proceeding in accordance with the Contract Documents. The Design Consultant will not be required to make exhaustive or continuous on-site inspections to check the quality or quantity of the Work, but it shall make as many inspections as may reasonably be required to fulfill its obligations to the Owner. On the basis of such on-site observations, the Design Consultant and his

consulting engineers shall endeavor to guard the Owner against defects and deficiencies in the Work of the Contractor. Contractor shall not be relieved from any of the obligations of the Contract Documents as a result of the Design Consultant's failure to detect any defective or deficient Work of the Contractor or others working by, through or under the Contractor.

2.2.4 The Design Consultant will render written field reports to the Construction Program Manager in the form required by the Construction Program Manager relating to the periodic visits and inspections of the Project required by Subparagraph 2.2.3.

2.2.5 The Design Consultant will not be responsible for and will not have control or charge of construction means, methods, techniques, sequences or procedures, or for safety precautions and programs in connection with the Work, and he will not be responsible for the Contractor's failure to carry out the Work in accordance with the Contract Documents. The Design Consultant will not be responsible for or have control or charge over the acts or omissions of the Contractor, Subcontractors, or any of their agents or employees, or any other persons performing any of the Work.

2.2.6 The Design Consultant shall at all times have access to the work wherever it is in preparation or progress. The Contractor shall provide safe facilities for such access so the Design Consultant may perform his functions under the Contract Documents.

2.2.7 As required, the Design Consultant will render to the Construction Program Manager, within a reasonable time, interpretations concerning the design and other technical aspects of the Work and the Contract Documents.

2.2.8 All communications, correspondence, submittals, and documents exchanged between the Design Consultant and the Contractor in connection with the Project shall be through or in the manner prescribed by the Construction Program Manager.

2.2.9 All interpretations and decisions of the Design Consultant shall be consistent with the intent of and reasonably inferable from the Contract Documents.

2.2.10 The Design Consultant's decisions in matters relating to artistic effect will be final if consistent with the intent of the Contract Documents.

2.2.11 If the Design Consultant observes any Work that does not conform to the Contract Documents, the Design Consultant shall report this observation to the Contractor and Construction Program Manager. The Design Consultant will prepare and submit to the Contractor and Construction Program Manager "an inspection report" of the Contractor's Work which is not in conformance with the Contract Documents. The Design Consultant shall have a reasonable time to complete his inspection report for substantial and final completion. Contractor shall, upon receipt of the inspection report, cause the defective, omitted or non-conforming work listed in the inspection report to be corrected and/or completed. Contractor shall further cause the person or entity performing the corrective work to sign the inspection report adjacent to the listed item, which signature

shall attest to the completion or correction of the listed item. After Contractor has completed and corrected all items listed in the inspection report, Contractor shall, in writing, call for final inspection. Design Consultant shall have a reasonable time within which to conduct the final inspection. In the event Design Consultant determines that one or more of the items required for completion of the work (whether listed in the inspection report referenced above or not) remain incomplete or uncorrected, then in such event, Contractor shall be responsible for and liable to the Owner for any and all additional design or construction inspection costs associated with the completion of the Project. This liability shall be in addition to any liability for liquidated damages otherwise due from Contractor and payable to Owner. It is the intent of this paragraph that Owner shall be responsible for the costs associated with one inspection to determine substantial completion and one additional inspection to determine final completion. All additional design or inspection costs shall be deducted from Contractor's final pay estimate and Contractor, by execution of this Contract, hereby consents to same. In the event insufficient funds remain in Contractor's final pay estimate, then Contractor shall promptly remit any such difference to Owner.

2.2.12 The Design Consultant has the authority to condemn or reject work on behalf of the Owner when, in its opinion, the work does not conform to the requirements of the Contract Documents. Whenever, in the Design Consultant's reasonable opinion, it is considered necessary or advisable for the implementation of the intent of the Contract Documents, the Design Consultant will have the authority to require special inspection or testing of the work in accordance with the provisions of the Contract Documents whether or not such work be then fabricated, installed or completed.

2.2.13 The Design Consultant will review Contractor's submittals such as Shop Drawings, Product Data and Samples, but only for conformance with the design concept of the Work and for general compliance with the Contract Documents. Such action shall be taken within fourteen (14) days of receipt unless otherwise authorized by the Construction Program Manager.

2.2.14 The Construction Program Manager will establish with the Design Consultant procedures to be followed for review and processing of all Shop Drawings, catalog submittals, Project reports, test reports, maintenance manuals, and other necessary documentation, as well as requests for changes and applications for extensions of time.

2.2.15 The Design Consultant will prepare Change Orders as required under the Contract Documents.

2.2.16 The Design Consultant and the Construction Program Manager will conduct inspections to determine the dates of Substantial Completion and Final Completion and will jointly issue a final Certificate for Payment. The Design Consultant shall be solely responsible for issuance of Certificates of Substantial and Final Completion.

2.2.17 The Design Consultant will prepare a set of reproducible record prints of Drawings showing significant changes in the Work made during the construction process, based

on neatly and clearly marked-up prints, Drawings, and other data furnished by the Contractor. The Design Consultant will also provide the Owner assistance in the original operation of any equipment or system such as initial start-up, testing, adjusting, and balancing.

2.2.18 In case of the termination of the employment of the Design Consultant, the Owner may appoint a new Design Consultant whose status under the Contract Documents shall be that of the former Design Consultant, or the Owner may have the Construction Program Manager assume all of the services of the Design Consultant thereafter.

END OF ARTICLE 2

ARTICLE 3

OWNER

3.1 DEFINITION

3.1.1 The Owner is the person or entity identified as such in the Owner-Contractor Agreement and is referred to throughout the Contract Documents as if singular in number and masculine in gender.

3.1.2 Owner: **St. Johns County School Board**
40 Orange Street
St. Augustine, Florida 32084

3.2 CONSTRUCTION PROGRAM MANAGER

3.2.1 A Construction Program Manager, as occasionally assigned by the owner, (herein referred to as the Construction Program Manager) may assist and advise the Owner during Project construction and until the issuance of the final Certificate for Payment. The term Construction Program Manager is referred to throughout the Contract Documents as if singular in number and masculine in gender. The Owner's communications with the Contractor and the Design Consultant shall generally be through the Construction Program Manager, who will assist the Owner with regard to the Project. The Owner must approve all Change Orders and payments to the Contractor and, notwithstanding anything in the Contract Documents to the contrary, neither the Design Consultant nor Construction Program Manager shall have any authority to authorize or issue change orders. All of the Contractor's communications to the Owner or to the Design Consultant shall be exclusively through the Design Consultant.

3.2.2 The Construction Program Manager is not authorized to revoke, alter, change, relax, or release any requirements of the Contract Documents, nor to approve or accept any portion of the Work not executed in accordance with, nor to issue instructions contrary to, the Contract Documents.

3.3 INFORMATION, SERVICES AND RIGHTS OF THE OWNER

3.3.1 The Construction Program Manager, will provide administration of the Contract as hereinafter described.

3.3.2 The Owner and the Construction Program Manager shall at all times have access to the Work whenever it is in preparation or progress. The Contractor shall provide safe facilities for such access.

3.3.3 The Owner and the Construction Program Manager shall not be responsible for or have control or charge of the construction means, methods, techniques, sequences, or procedures, or for safety precautions and programs in connection with the Work, and will not be responsible for the Contractor's failure to carry out the Work in accordance with the Contract Documents.

3.3.4 The Construction Program Manager or Design Consultant will have authority to require special inspection or testing of the work in accordance with Subparagraph 2.2.12 whether or not such Work is then fabricated, installed, or completed. However, neither the Construction Program Manager's authority to act under Subparagraph 3.3.4, nor any decision made by the Construction Program Manager in good faith either to exercise or not to exercise such authority shall give rise to any duty or responsibility of the Construction Program Manager to the Contractor, any Subcontractor, any of their agents or employees, or any other person performing any of the Work.

3.3.5 The Construction Program Manager shall have the authority and discretion to call, schedule, and conduct job meetings to be attended by the Contractor, representatives of his Subcontractors, and the Design Consultant, to discuss such matters as procedures, progress, problems, and scheduling.

3.3.5.1 Each Contractor is requested and required to attend weekly job site progress conferences as called by the Design Consultant. Contractor shall be represented at these job progress conferences by an authoritative representative of the home office of the Contractor as well as by Project personnel representatives. These meetings shall be open to Subcontractors, material suppliers, and any others who can contribute shall be encouraged by Contractor to attend. It shall be the principal purpose of these meetings, or conferences, to affect coordination, cooperation and assistance in every practical way toward the end of maintaining progress of the Project on schedule and to complete the Project within the specified Contract Time. Each Contractor shall be prepared to assist progress of the work and to recommend remedial measures for the correction of progress as may be appropriate. The Construction Program Manager shall be the coordinator of the conferences and shall preside as chairman.

3.3.6 The Construction Program Manager and/or Design Consultant will establish procedures to be followed for processing all Shop Drawings, catalogs, and other Project reports, and other documentation, test reports, and maintenance manuals.

3.3.7 The Design Consultant will review all requests for changes and Design Consultant shall implement the processing of Change Orders, including applications for extension of the Contract Time.

3.3.8 The Owner and the Construction Program Manager, however, will not be responsible for the failure of the Contractor to plan, schedule, and execute the Work in accordance with the approved schedule or the failure of the Contractor to meet scheduled completion dates or the failure of the Contractor to schedule and coordinate the Work of his own

trades and Subcontractors or to coordinate and cooperate with other separate Contractors.

3.3.9 The Construction Program Manager, in consultation with the Design Consultant, will review and process all Applications for Payment by the Contractor, including the final Application for Payment.

3.3.10 The Owner, Construction Program Manager and Design Consultant shall not be responsible or liable to Contractor for the acts, errors or omissions of any separate prime contractor, surveyor, designer other entity or their respective Subcontractors, agents or employees, or any other persons performing any work separate from Contractor's Work at or on the Project (hereinafter collectively referenced as "Separate Prime Contractor"). In all such cases, Contractor shall look solely to the Separate Prime Contractor for recovery of any and all damages caused to Contractor or the Work, by the Separate Prime Contractor's acts, omissions or errors. Contractor further agrees to provide any such Separate Prime Contractor written notice, within the same time frames required for timely notice of any similar claim had it been made against Owner, of any such claim(s), but addressed and delivered to the Separate Prime Contractor, with a copy provided to Owner for informational purposes only. Failure to timely provide such notice shall give rise to the Separate Prime Contractor having all of the defenses inuring under this agreement to Owner in the event of the untimely provision of notice of such a claim. To the limited extent that Separate Prime Contractor(s) are entitled to timely notice of any claim herein from Contractor and to assert defenses arising out of the Contract Documents for the Contractor's failure to provide timely notice of its claims against them, the Separate Prime Contractor(s) are expressly intended third party beneficiaries of the Contract Documents. Separate Prime Contactor(s) are not intended third party beneficiaries of the Contract Documents for any other purposes. Contractor hereby waives and releases any claims against Owner for damages caused by any Separate Prime Contractor. Contractor and all Separate Prime Contractors, if any, are required to coordinate and schedule their respective work so as not to unreasonably interfere with one another's operations. Contractor shall be solely responsible for such coordination and scheduling with the Separate Prime Contractor and the Owner shall have no liability for improper coordination or scheduling between Contractor and Separate Prime Contractor. Contractor hereby acknowledges that it has included in its Base Bid Price and the Contract Sum, the costs of such coordination and has also included sufficient time in its construction schedule to coordinate the Work with such Separate Prime Contractor(s) without requiring any extension of the Contract Time and without interference with the Separate Prime Contractor's work at the Project.

3.3.11 The Owner shall furnish all surveys describing the physical characteristics, legal limitations and utility locations for the site of the Project. Such documents are not part of the Contract Documents and are provided for Contractor's information only.

3.3.12 The Owner shall secure and pay for necessary easements, required for permanent structures or for permanent changes in existing facilities.

3.3.13 At all times relevant hereto, Contractor shall be required to keep the Project in a clean and reasonably safe condition. If Contractor shall see or identify an unsafe condition at the Project site, he shall immediately bring the condition to a safe one.

3.3.14 The Owner will make available for the Contractor's reasonable review, at the Owner's offices or together with the Contract Documents, certain boring logs, geotechnical, soils and other reports, surveys and analyses prepare by Separate Prime Contractor's within the meaning of Article 3.3.10 above, pertaining to the Contract site of which the Owner is aware and has in its possession. Any boring logs that are provided to the Contractor are only intended to reflect conditions at the locations of the borings and do not necessarily reflect site conditions at other locations. Any reports, surveys, boring logs and analyses provided by Owner are for the Contractor's information only, and their accuracy and completeness are not guaranteed or warranted by the Owner, the Construction Program Manager or the Design Consultant, and such reports are not adopted by reference into, nor are they part of the Contract Documents. Notwithstanding any factual statement, conclusion, or any language or recommendations contained in such reports, the Contractor assumes full responsibility for inspection of the site and determination of the character, legal limits, quality and quantity of any soil, surface or subsurface conditions that may be encountered or which may affect the Work, and for the means and methods of construction that he employs when performing the Work.

3.3.15 The foregoing rights are in addition to other rights of the Owner enumerated herein and those provided by law.

3.4 OWNER'S RIGHT TO STOP OR TO SUSPEND THE WORK

3.4.1 If the Contractor fails to correct defective Work as required by Paragraph 13.2 or fails to carry out the Work or supply labor and materials in accordance with the Contract Documents, the Construction Program Manager or Owner by a written order may order the Contractor to stop the Work, or any portion thereof, until the cause for such order has been eliminated; however, this right of the Construction Program Manager or Owner to stop the Work shall not give rise to any duty on the part of the Construction Program Manager or Owner to exercise this right for the benefit of the Contractor or any person or entity other than the Owner.

3.4.2 The Construction Program Manager or Owner may order the Contractor in writing to suspend, delay, or interrupt all or any part of the Work for such period of time as the Owner may determine to be appropriate for its convenience.

3.4.3 If the performance of all or any part of the Work is, for an unreasonable period of time, suspended, delayed, or interrupted by an act of the Owner, the Construction Program Manager, or the Design Consultant in the administration of this Contract, or by failure of any one of them to act within the time specified in this Contract (or if no time is specified, within a reasonable time), an adjustment shall be made for an increase in the actual time required for performance of the Work by the Contractor, due solely to such unreasonable suspension, delay, or interruption and the Contract modified in writing

accordingly. However, no claim for an extension of time shall be made under this Subparagraph 3.4.3 for any suspension, delay, or interruption pursuant to Subparagraph 3.4.1, or for which claim is provided or excluded under any other provision of this Contract. No claim under this Subparagraph shall be allowed for an extension of time required for performance, unless within 20 days after the act or failure to act involved, the Contractor submits to the Construction Program Manager a written statement setting forth, as then practicable, the extent of such claimed time extension and unless the claim for an extension of time is asserted in writing as soon as practicable after the termination of such suspension, delay, or interruption, and unless such delay actually delayed critical work activities on the Project. Any time extension granted shall only be for the unreasonable portion of the delay to critical work activities and in accordance with Article 8 hereof.

3.4.4 In the event of a suspension of work or delay or interruption of work per Article 3.4.3, the Contractor and his Subcontractors shall protect carefully his, and their, materials and work against damage or injury from the weather and maintain completed and uncompleted portions of the work as required by the Contract Documents. If, in the opinion of the Construction Program Manager, any work or material shall have been damaged or injured by reason of failure on the part of the Contractor or any of his Subcontractors to so protect same, such work and materials shall be removed and replaced at the expense of the Contractor.

3.4.5 No claim by the Contractor for an equitable adjustment under Subparagraph 3.4.3 shall be allowed if asserted after final payment under this Contract.

3.5 OWNER'S RIGHT TO CARRY OUT THE WORK AND SURETY'S OBLIGATIONS

3.5.1 If the Contractor defaults or neglects to carry out the Work in accordance with the Contract Documents and fails within seven days after receipt of written notice from the Construction Program Manager, with a copy of such notice sent to the Contractor's surety, to commence and continue correction of such default or neglect with diligence and promptness, the Owner may, and without prejudice to any other remedy he may have, make good such deficiencies and may further elect to complete all Work thereafter through such means as the Owner may select, including the use of a new Contractor pursuant to Article 3.5.2. In such case the Owner shall provide notice to the Contractor's surety and an appropriate unilateral Change Order, signed by Owner, shall be issued deducting from the payments then or thereafter due the Contractor the cost of correcting such deficiencies, including compensation for the Design Consultant's and the Construction Program Manager's additional services made necessary by such default, neglect or failure. Such action by the Owner and the amount charged to the Contractor are both subject to the prior approval of the Construction Program Manager and the Design Consultant. If the payments then or thereafter due the Contractor are not sufficient to cover such amount, the Contractor shall pay the difference to the Owner. Notwithstanding the Owner's right to carry out a portion of the work, maintenance and protection of the work remains the Contractor's and Surety's responsibility as provided for in the Performance Bond and warranty obligations of the Contractor.

3.5.2 Whenever Contractor shall be, and is declared by Owner to be in default under the Contract, the Owner having performed Owner's obligations thereunder, the Surety shall promptly remedy the default, or shall promptly, at Owner's sole and exclusive option:

1) Complete the Contract in accordance with its terms and conditions, or,

2) Obtain a Bid or Bids for completing the Contract in accordance with its terms and conditions upon determination by the Owner and the Surety jointly of the lowest responsible Bidder, arrange for a Contract between such Bidder and Surety to complete the Work and provide any required warranty work on service, or

3) Indemnify the Owner from any completion cost incurred by it in completion of the Work, including but not limited to all construction, design, inspection or other costs incurred to completely and timely perform the Work, including payment of the any assessment of liquidated damages.

3.5.3 Notwithstanding anything contained in the Performance and Payment Bonds (hereinafter collectively "Bonds") issued by the Contractor and its Surety to the contrary, neither the Contractor nor its Surety shall be relieved of their respective obligations under the Bonds by reason of any alleged overpayments to the Surety or by any changes to the Work or Contract Documents, whether material, cardinal or otherwise by the Owner and Contractor. Contractor and its Surety on the Bonds do hereby consent to all payments being made to Contractor until such time as Surety shall expressly instruct Owner otherwise, in writing. Contractor and its Surety do hereby waive notice of right to any and all changes to the Work or Contract Documents and agree not to assert any such changes as a defense to liability under the Bonds.

END OF ARTICLE 3

ARTICLE 4

CONTRACTOR

4.1 DEFINITION

4.1.1 The Contractor is the person or organization identified as such in the Owner-Contractor Agreement and is referred to throughout the Contract Documents as if singular in number and masculine in gender. The term Contractor means the Contractor or his authorized representative, who shall have authority to bind the Contractor in all matters pertinent to this Contract.

4.1.2 This entire Contract is not one of agency by the Contractor for Owner but one in which Contractor is engaged independently in the business of providing the services and performing the Work herein described as an independent Contractor.

4.2 REVIEW OF CONTRACT DOCUMENTS

4.2.1 Before placing his proposal to the Owner, and continuously after execution of the Contract, the Contractor shall carefully study and compare the Contract Documents and shall at once report to the Owner and Design Consultant through the Construction Program Manager any error, inconsistency or omission he may discover in the Contract Documents, including any requirement which may be contrary to any law, ordinance, rule, regulation or order of any public authority bearing on the performance of the Work. If the Contractor has reported in writing an error, inconsistency or omission, has promptly stopped the affected work until otherwise instructed, and has otherwise followed the instructions of the Owner, the Contractor shall not be liable to the Owner or the Design Consultant for any damage resulting from any such errors, inconsistencies or omissions in the Contract Documents. The Contractor shall perform no portion of the Work at any time without first: being awarded the Contract; furnishing the required certification of insurance; furnishing the required Payment and Performance Bonds; furnishing the required licensure certification or registration; receiving a Notice to Proceed under these Contract Documents; and, where required, possessing approved Shop Drawings, Product Data or Samples for such portion of the Work.

4.2.2 The Contractor and his Subcontractors shall keep at the site of the Work at least one copy of the drawings and specifications and shall at all times give the Construction Program Manager, the Design Consultant, inspectors, as well as other representatives of the Owner access thereto. Further, said drawings shall be the approved sets issued to the Contractor by the Owner through the Construction Program Manager.

4.3 SUPERVISION AND CONSTRUCTION PROCEDURES

4.3.1 The Contractor shall supervise, coordinate and direct the Work, using his best skill and attention. He shall be solely responsible for and have control over all construction means, methods, techniques, sequences and procedures of construction and for coordinating all portions of the Work under the Contract.

4.3.1.1 It shall be the responsibility of the Contractor to coordinate the work with other Separate Prime Contractors; to maintain a progress schedule for all Separate Prime Contractors for this Project; and to notify the Construction Program Manager and the Design Consultant of any changes in the approved progress schedule. He shall be responsible for providing adequate notice to all Separate Prime Contractors to insure efficient continuity of all phases of the Project work.

4.3.2 The Contractor shall be responsible to the Owner for the acts and omissions of his employees, Subcontractors and sub-Subcontractors, suppliers, their agents and employees, and other persons performing any of the Work and for their compliance with each and every requirement of the Contract Documents, in the same manner as if they were directly employed by the Contractor.

4.3.3 The Contractor shall not be relieved from his obligations to perform the Work in accordance with the Contract Documents either by the acts, failures to act or duties of the Owner, the Design Consultant or the Construction Program Manager in their administration of the Contract, or by inspections (or lack thereof), tests or approvals (or lack thereof) required or performed under Paragraph 7.6 by persons other than the Contractor.

4.3.4 Before starting any section of work, the Contractor shall carefully examine all preparatory work that has been executed to receive his work to see that it has been completed in accordance with the Contract Documents. He shall check carefully, by whatever means are required, to ensure that his Work and adjacent, related work will finish to proper and required standards for quality, contours, planes, and levels.

4.3.5 The Contractor understands and agrees that the Owner, Construction Program Manager and Design Consultant will not be responsible for and will not have control or charge of construction means, methods, techniques, sequences or procedures, or for safety precautions and programs in connection with the Work, and they will not be responsible for the Contractor's failure to carry out the Work in accordance with the Contract Documents. The Owner, Construction Program Manager and the Design Consultant will not be responsible for or have control or charge over the acts or omissions of the Contractor, Subcontractors, or any of their agents or employees, or any other persons performing any of the Work.

4.3.6 The Contractor shall employ no plant, equipment, materials, methods or persons to which the Construction Program Manager and Design Consultant have a reasonable

objection and shall remove no portion of the Work or stored materials from the site of the Work.

4.3.7 Contractor shall ensure that all persons, firms or entities working by, through or under his general Contract shall at all times comply with the requirements of Sections 1012.32, 1012.465, Florida Statutes and the Jessica Lunsford Act (hereinafter "Lunsford Requirements"), as amended from time to time by the Florida Legislature and/or as implemented by the Owner. Contractor acknowledges that the requirements for compliance with the Lunsford Requirements, as they may be changed or amended from time to time during the course of Contractor's performance of the Work, is included in the Contract Sum. Contractor further acknowledges that it shall not be entitled to any increase in the Contract Time or Sum as a result of its and its subcontractors' compliance with the Lunsford Requirements. Contractor hereby certifies that it and its Subcontractors, materialmen and suppliers, including all of their employees, laborers, staff, leased personnel or others working by through or under the direction of Contractor on the Project site shall comply with all of the Lunsford Requirements at all times during the performance of the work and that such compliance will be at Contractor's sole cost and expense. Upon request, Contractor shall immediately produce evidence of compliance with the Lunsford Requirements to Owner, Design Consultant and/or Construction Program Manager as to any or all persons, firms, entities or others working at the Project site. Contractor shall be required to immediately remove any persons not in compliance with the Lunsford Requirements upon discovery of non-compliance and to report such non-compliance to the Owner.

Contractor shall also cause this Article 4.3.7 to be incorporated by reference or included in each and every purchase order, sub-contract agreement or other contract for persons working by, through or under the ultimate direction of Contractor at the Project site and shall further require all such persons and entities to include this Article 4.3.7 in each of their respective agreements with lower tier sub-Subcontractors, materialmen or others working at the Project site. Finally, Contractor shall continuously maintain a list of all persons who work by, through or under its ultimate direction on the Project Site and their certification and approval to work at the Project site in accordance with the Lunsford Requirements. Contractor shall also pay all of the cost to obtain and maintain such compliance with the Lunsford Requirements for each such person or entity working by, through or under its ultimate direction at the Project site.

A sworn certification of compliance with the Lunsford Requirements will be provided to the Owner in advance of the Contractor providing any services on the Project site while students are present. The Contractor shall pay the cost of acquiring the background screening required by Section 1012.32, F.S. and of any fees imposed by the Florida Department of Law Enforcement to maintain the fingerprints and compliance with the Lunsford Requirements for all persons working at the Project site under Contractor's ultimate direction. Contractor shall maintain an up to date list of all persons working under its ultimate direction at the Project site and their certified compliance with the Lunsford Requirements. Owner shall advise Contractor of any new Lunsford Requirements implemented after execution of the Contract Documents

and Contractor shall immediately bring the workforce working under its ultimate direction into full compliance with such new or additional requirements at no cost or expense to Owner. Contractor acknowledges that it has included in its Base Bid price an amount deem sufficient to cover any additional cost of such compliance with new or additional Lunsford Requirements. Contractor agrees that in the event the Contractor or any person or entity working under its ultimate direction at the Project site who was previously certified as meeting the Lunsford Requirements subsequently no longer meets such requirements that Contractor shall immediately remove such person or entity from the Project site and not permit its return until Contractor may again properly certify compliance with the Lunsford Requirements for such person or entity.

4.4 CONTRACTOR'S REPRESENTATIONS

4.4.1 By entering into this Contract with the Owner, the Contractor represents and warrants the following, together with all other representations and warranties in the Contract Documents:

.1 that he is experienced in and competent to perform the type of work required and to furnish the plant, materials, supplies or equipment to be so performed or furnished by him;

.2 that he is financially solvent, able to pay his debts as they mature, and possessed of sufficient working capital to initiate and complete the Work required under the Contract;

.3 that he is familiar with all Federal, State, County, municipal and department laws, ordinances, permits, regulations and resolutions, including the Lunsford Requirements as referenced in Article 4.3.7 above which may in any way affect the Work or those employed therein, including but not limited to any special laws or regulations relating to the Work or any part thereof;

.4 that such temporary and permanent work required by the Contract Documents which is to be done by him will be satisfactorily constructed and fit for use for its intended purpose and that such construction will not injure any person, or damage any property;

.5 that he has carefully examined the Contract Documents and the site of the Work and that from his own investigations, he has satisfied himself and made himself familiar with:

(1) the nature, access to and location of the Work;

(2) the character, legal limits, quality and quantity of surface and subsurface materials likely to be encountered, including, but not limited to, all structures and obstructions on or at the Project site, both natural and man-made;

(3) the character of equipment and other facilities needed for the performance of the Work;

(4) the general and local conditions including without limitation its climatic conditions, the availability and cost of labor and the availability and cost of materials, tools and equipment;

(5) the quality and quantity of all materials, supplies, tools, equipment, labor and professional services necessary to complete the work in the manner required by the Contract Documents; and (6) all other matters or things which could in any manner affect the performance of the Work;

.6 that he will fully comply with all requirements of the Contract Documents;

.7 that he will perform the Work consistent with the best workmanship, sound business practice, and in the most expeditious and economical manner consistent with the best interests of the Owner;

.8 that he will furnish efficient business administration and experienced superintendence and an adequate supply of properly qualified workmen, equipment, tools and materials at all times;

.9 that he has carefully reviewed the Work required and that the Work can be planned and executed in a normal and orderly sequence of Work and reasonably scheduled so as to ensure completion of the work in accordance with the Contract Documents, allowing for normal and reasonably foreseeable weather, labor, coordination and other delays, interruptions and disruptions of the Work, including but not limited to those caused by coordination with Separate Prime Contractors;

.10 that he will complete the Work within the Contract Time and all portions thereof within any required Contract Milestones; and

.11 that the Contract Price is based upon the labor, materials, systems and equipment required by or reasonably inferable from the Contract Documents, without exception.

4.5 LABOR AND MATERIALS

4.5.1 Unless otherwise provided in the Contract Documents, the Contractor shall provide and pay for all labor, materials, equipment, supplies, tools, construction equipment and machinery, water, heat, utilities, transportation, and other facilities and services necessary or proper for or incidental to the execution and completion of the Work required by and in accordance with the Contract Documents and any applicable code or statute, whether specifically required by the Contract Documents or whether their provision may reasonably be inferred as necessary to produce the intended results, whether temporary or permanent and whether or not incorporated or to be incorporated in the Work. Final payment will not be made until the Work is so completed. The Contractor hereby acknowledges that the Contract Sum and its Bid price is not based upon any claim to the land, timber, soils or other resources at the Construction site, except for the use of soils for necessary for the site work on the Project.

4.5.2 The Contractor shall at all times enforce strict discipline and good order among his employees and shall not employ on the Work any unfit Subcontractor or person or anyone not skilled in the task assigned to him. The Owner may, by notice in writing, require the Contractor to remove from the work any Subcontractor or employee the Owner deems incompetent, careless or otherwise objectionable and Contractor shall provide for this contingency in his sub-contracts and remove all such persons at no additional cost or expense to Owner.

4.5.3 The Contractor shall be responsible for ensuring that the work is completed in a skillful and workmanlike manner using only the best skill, attention and care available for the completion of the Project.

4.5.4 The Contractor shall perform at least that percentage of the Work, if any, specified in Article 7 of the Owner-Contractor Agreement, with forces that are in the direct employment of the Contractor's organization. The Contractor shall submit to the Construction Program Manager within thirty (30) calendar days after award of the Contract for the Work, a designation of the Work to be performed by the Contractor with his own forces. The percentage of the Work to be performed under sub-contract, shall be calculated by adding the amounts of all sub-contracts and dividing this sum by the total amount of the Contract. No portion of the Contract shall be sub-contracted or otherwise performed by a party not the Contractor, except with the written consent of the Owner.

4.5.5 All equipment, apparatus and/or devices of any kind to be incorporated into the work that are shown or indicated on the drawings or called for in the Specifications or required for the completion of the work shall be entirely satisfactory to the Construction Program Manager and the Design Consultant as regards operations, capacity and/or performance. No approval, either written or verbal, of any drawings, descriptive data or samples of such equipment, apparatus and/or device shall relieve the Contractor of his responsibility to turn over the same in good working order and fit for its intended purpose and use at the completion of the Work in complete accordance with the Contract Documents. Any equipment, apparatus and/or device not fulfilling these requirements shall be removed and replaced by new, proper and acceptable equipment satisfactory to the Construction Program Manager and Design Consultant without additional cost to the Owner.

4.6 WARRANTY

4.6.1 The Contractor warrants to the Owner, the Construction Program Manager, and the Design Consultant that all materials and equipment furnished under this Contract will be new, unless otherwise specified, and that all workmanship will be of the best, first class quality, free from faults and defects and in conformance with the Contract Documents and all other warranties and guaranties specified therein. Where no standard is specified for such workmanship or materials, they shall be the best of their respective kinds. All Work not conforming to these requirements, including substitutions not properly approved and authorized, may be considered defective. If required by the Construction Program Manager or the Design Consultant, the Contractor shall furnish satisfactory evidence as to the kind and quality of materials, workmanship and equipment. This warranty is not limited by the provisions of Article 13.

4.6.2 The Work included in this Contract is herein specified. The Contractor will be required to complete the Work specified and to provide all items needed for construction of the Project, complete and in the best working order.

4.6.3 The warranties set forth in this Paragraph 4.6 and elsewhere in the Contract Documents shall survive Final Completion of the Work under Paragraph 9.9.

4.6.4 The Contractor and Surety guarantee and warrant to the Owner all work as follows:

.1 that all materials and equipment furnished under this Contract will be new and the best of its respective kind unless otherwise specified;
.2 that all Work will be of the best, first-class quality and free of omissions and faulty, poor quality, imperfect and defective material or workmanship;
.3 that the Work shall be entirely watertight and leak proof in accordance with all applicable industry customs, standards and practices, and shall be free of shrinkage and settlement;
.4 that the Work, including but not limited to, mechanical and electrical machines, devices and equipment, shall be fit and fully usable for its intended and specified purpose and shall operate satisfactorily with ordinary care;
.5 that consistent with requirements of the Contract Documents the Work shall be installed and oriented in such a manner as to facilitate unrestricted access for the operation and maintenance of fixed equipment; and
.6 that the Work will be free of abnormal or unusual deterioration which occurs because of poor quality materials, workmanship or unsuitable storage.

4.6.5 All Work not conforming to guarantees and warranties specified in the Contract Documents, including substitutions not properly approved and authorized, may be considered defective. If required by the Design Consultant, the Contractor or Surety shall furnish satisfactory evidence as to the kind and quality of workmanship, materials and equipment.

4.6.6 If, within one year after the Date of Final Completion of the Work or within such longer period of time as may be prescribed by law or by the terms of any applicable special warranty required by the Contract Documents, any of the Work is found to be defective, not in accordance with the Contract Documents, or not in accordance with the guarantees and warranties specified in the Contract Documents, the Contractor or its Surety shall correct it within five (5) working days or such other period as mutually agreed, after receipt of a written notice from the Owner to do so. The Owner shall give such notice with reasonable promptness after discovery of the condition.

4.6.7 If at any time latent deficiencies in the Work are discovered, the Contractor will be liable for replacement or correction of such Work and any damages which Owner has incurred related thereto, regardless of the time limit of any guarantee or warranty, up to the time limit of the applicable statute of repose.

4.6.8 Any materials or other portions of the Work, installed, furnished or stored on site which are not of the character or quality required by the specifications, or are otherwise not acceptable to the Construction Program Manager, the Design Consultant or the Owner, shall be immediately removed and replaced by the Contractor to the satisfaction of the

Construction Program Manager, Design Consultant and Owner, when notified to do so by the Construction Program Manager, Design Consultant or Owner. All such materials shall be replaced at the Contractor's sole cost and expense.

4.6.9 If the Contractor fails to correct defective or nonconforming Work as required by Article 4.6.6, or if the Contractor fails to remove defective or nonconforming Work from the site, as required by Article 4.6.8, the Owner may elect to either correct such Work in accordance with Article 3.5 or remove and store materials and equipment at the expense of the Contractor. If the Contractor does not pay the cost of such removal and storage within ten (10) days thereafter, the Owner may upon ten (10) additional days' written notice sell such Work at auction or at private sale and shall account for the net proceeds thereof, after deducting all the costs that should have been borne by the Contractor, including compensation for the Construction Program Manager's and/or the Design Consultant's additional services made necessary thereby. If such proceeds of sale do not cover all costs which the Contractor should have borne, the difference shall be charged to the Contractor and an appropriate Change Order shall be issued. If the payments then or thereafter due the Contractor are not sufficient to cover such amount, the Contractor shall pay the difference to the Owner.

4.6.10 The Contractor shall bear the cost of making good all work of the Owner, separate Contractors or others, destroyed or damaged by such correction or removal required under this Article 4, Article 13 or elsewhere in the Contract Documents.

4.7 TAXES AND DIRECT OWNER PURCHASE OPTION

4.7.1 The Contractor has included in its Contract Price and shall pay all sales, consumer, use and other similar taxes for the Work or portions thereof provided by the Contractor which are legally enacted at the time Bids are received, whether or not yet effective. Owner reserves the right to delete portions of the Work and to direct purchase materials to realize a tax savings via an Owner Direct Purchase ("ODP") program. Contractor hereby agrees to permit Owner to direct purchase from his suppliers at prices quoted to Contractor and for Owner to retain any tax savings generated thereby.

4.7.2 In accordance with the provisions of Article 4.7.1 of the General Conditions, Owner may exercise its right to implement an Owner Direct Purchase/ Sales Tax Savings Program, with respect to this PROJECT. This Article describes the procedures by which this program will be implemented and administered if the Owner subsequently determines to do so. Pursuant to these procedures, Owner may order and pay for all such purchases, as well as take title to all such purchases, directly from the supplier or manufacturer.

At the time the Contract Price is established, but not later than concurrently with submission of the required Schedule of Values, Owner, Construction Program Manager and Contractor shall endeavor to identify the specific items and the estimated costs of the potential Owner Direct Purchases ("ODP"). Contractor shall

identify a separate line item cost for each potential ODP item. Contractor must clearly and separately identify any contingency or allowance amount associated with any ODP line items. The Contract Price must include the total cost of the Work, including the cost of the ODP items and their associated sales taxes.

Based upon its review of the Contract Documents, Contractor shall recommend potential ODP items to Owner and Construction Program Manager. After reviewing the Contractor's recommendations and the applicable Contract Documents, and after consultation with the Construction Program Manager, Owner shall make the final determination as to which items, if any, will be purchased as ODP items.

4.7.3 After Owner identifies the ODP items, Contractor shall prepare a standard purchase order requisition on a purchase order form provided by Owner, to specifically identify the materials which Owner has elected to purchase directly. The purchase order requisition form shall include the following information:

1 Project Name;
2. Contractor Name;
3. Manufacturer/Supplier Name;
4. Name, address, telephone number and contact person for Manufacturer/ Supplier;
5. Manufacturer or brand model or specification number of the item;
6. The quantity and unit of measure needed as estimated by Contractor;
7. The price quoted by the Manufacturer/Supplier for the materials or equipment identified;
8. All sales tax associated with the price quote;
9. Delivery address;
10. Delivery dates;
11. Delivery instructions;
12. Vendor identification number;
13. Mailing address for invoices.

All purchase order requisitions prepared by Contractor must be sent to Owner's, Facilities & Operations Department, with a copy to the Construction Program Manager, and they must be expressly approved by OWNER before they will be sent by OWNER to the applicable Manufacturer/Supplier. In preparing the standard purchase order requisition, the Contractor shall include all terms and conditions, which may have been negotiated by the Contractor with the Manufacturer/Supplier (e.g. payment terms, warranties, etc.). To the extent any such terms or conditions differ from the standard terms and conditions included in Owner's standard purchase order requisition form, such differences must be specifically identified to Owner by the Contractor at the time the Contractor forwards the requisition to Owner for its review. All shipping expenses associated with any ODP item (including all freight insurance) must be included in the cost of that item and not charged as a separate item.

All purchase order requisitions prepared by Contractor must be submitted to Owner

and Construction Manager no less than twenty-one (21) calendar days prior to the need for the ordering of the subject ODP item, in order to provide sufficient time for their review. Contractor is responsible for ensuring that all necessary attachments to the purchase order requisition (e.g., shop drawings, details, specification sheets, etc.) required to properly place the order with the Manufacturer/Supplier, have been attached to the purchase order requisition at the time it is sent to Owner for their review. Once approved by Owner, Owner shall forward the completed purchase order requisition, with all attachments, to the Manufacturer/Supplier, with a copy to Contractor.

4.7.4 As ODP items are delivered to the job site, the Contractor shall visually inspect all shipments from Manufacture/Suppliers and approve the vendor's shipping record for material delivered. The Contractor shall assure that each delivery of an ODP item is accompanied by the appropriate documentation to adequately identify the purchase order number against which the purchase is made and to confirm that the correct type and quantity of the ODP item has been delivered in the appropriate condition. The Contractor’s approval will include a legible signature (printed) of the person who inspected the delivered items, dated as of the date of delivery.

All invoices from the Manufacturer/Supplier must be directed and sent to Construction Program Manager and Owner’s Facilities & Operations Department via the Contractor. It is the responsibility of the Contractor to review all such invoices and confirm their correctness before forwarding them on to the Construction Program Manager and Owner for processing and payment. The Contractor shall verify in writing to Owner the accuracy of the invoice in relation to the delivery ticket and the ODP items actually delivered. The Contractor shall obtain from the Manufacturer/Supplier all releases, warranties and other necessary supporting documentation which may be required by Owner and shall insure that all such releases, warranties and supporting documentation have been attached to the invoice before forwarding the invoice to OWNER for processing and payment. The Contractor also is responsible for obtaining from the Manufacturer/Supplier all operating information and manuals, spare parts and all other items required to be provided by the Manufacturer/Supplier. The Contractor shall review all such items for compliance with the requirements of the Contract Documents and shall organize and deliver all such items to Owner as part of its requirements for achieving Substantial Completion of the Work.

Each month the Contractor, Owner and the Construction Program Manager shall review the ODP’s that have been delivered and paid for during that month. Contractor’s monthly requests for payment of completed Work will be reduced by an amount equal to the value of any ODP's, including sales taxes, paid for by Owner and not previously deducted from a prior payment application, during the previous month(s). At a time of its choosing, but prior to completion of the Work, Owner shall prepare an appropriate Change Order, for Contractor’s execution, which reduces the Contract Sum by the total cost paid by Owner for the ODP's, together with the amount of sales tax savings that have been realized as a result of Owner Direct Purchases.

Further, the CHANGE ORDER shall deduct from the CONTRACT PRICE any remaining contingency or allowance balance associated with the subject ODP item.

Nothing in this Article 4.7 relieves the Contractor from its responsibility for the requisitioning of the order, scheduling, coordinating, insuring, delivery, unloading, storage, installation, repair, operation and warranty of all ODP items. All such obligations remain the responsibility of the Contractor and have been pay for by Owner as a part of the Contract Price (which always included these responsibilities and obligations) as fully as if there had been no Owner ODP purchase whatsoever.

4.8 PERMITS, FEES AND NOTICES

4.8.1 Except as specifically provided in Subparagraph 3.3.13, the Contractor shall secure and pay for all permits and governmental fees, licenses and inspections necessary for the proper execution and completion of the Work which are legally required at the time the bids are received. The total cost of the permits will be paid by the Contractor. Each Contractor will pay for his own fees, licenses and inspections for his part of the work. Impact fees, acreage fees and costs for service and service connections of the respective utility will be paid by the Owners.

4.8.2 The Contractor shall give all notices and comply with all laws, ordinances, rules, regulations and lawful orders of any public authority bearing on the performance of the Work.

4.9 ALLOWANCES

4.9.1 The Contractor shall include in the Contract Sum all allowances stated in the Contract Documents. Items covered by these allowances shall be supplied for such amount and by such persons as the Owner may direct, but the Contractor will not be required to employ persons against whom he makes a reasonable objection.

4.9.2 Unless otherwise provided in the Contract Documents:

.1 these allowances shall cover the cost to the Contractor, less any applicable trade discount, of the materials and equipment required by the allowance delivered at the site, and all applicable taxes;
.2 the Contractor's costs for unloading and handling on the site, labor, installation costs, overhead, profit and other expenses contemplated for the original allowance shall be included in the Contract Sum and not in the allowance;
.3 whenever the cost is more than or less than the allowance, the Contract Sum shall be adjusted accordingly by Change Order, the amount of which will recognize changes, if any, in handling costs on the site, labor, installation costs, overhead, profit and other expense.

4.10 SUPERINTENDENT

4.10.1 The Contractor shall employ a competent superintendent and necessary assistants who shall be in attendance at the Project site during the progress of the Work. The superintendent shall represent the Contractor and all communications given to the superintendent shall be as binding as if given to the Contractor. If the Contractor employs more than a single individual in this role, the Construction Program Manager shall be provided an organizational chart and personnel listing for the superintending staff. In such event, all references to the superintendent elsewhere in the Contract Documents shall mean the superintending staff.

4.10.2 The superintendent shall be in attendance at the Project site not less than eight (8) hours per day, five (5) days per week, unless the job is closed down due to a general strike or conditions beyond the control of the Contractor or until completion or termination of the Contract in accordance with the Contract Documents. It is understood that such Superintendent shall be acceptable to the Owner and the Construction Program Manager and shall be the one who will be continued in that capacity for the duration of the Project, unless he ceases to be on the Contractor's payroll or the Owner otherwise agrees. The Superintendent shall not be employed on any other Project for or by Contractor or any other entity during the course of the Work.

4.10.3 In the event any of the following conditions shall exist, the Contractor shall require that his superintendent be at the Project site not less than ten (10) hours per day, six (6) days per week:

.1 should Substantial Completion not be accomplished on schedule.
.2 should Final Completion not be accomplished on schedule.
.3 should the progress schedule indicate in the opinion of the Construction Program Manager that the Contractor is fourteen (14) or more days behind schedule at any time during construction up until thirty (30) days prior to scheduled Substantial Completion.
.4 should the progress schedule indicate in the opinion of the Construction Program Manager that the Contractor is seven (7) or more days behind schedule at any time during the last thirty (30) days prior to scheduled Substantial Completion.

4.11 PROGRESS SCHEDULE

4.11.1 The Contractor shall prepare and submit to the Construction Program Manager for the Owner's review and approval an as-planned progress schedule for the Work pursuant to Division 1, Section 01311 of the General Requirements entitled "Construction Schedules and Reports". This Schedule shall be submitted after notice of apparent low Bidder status, but prior to Contract award.

4.12 RESPONSIBILITY FOR COMPLETION

4.12.1 The Contractor shall furnish such manpower, materials, facilities and equipment and shall work such hours, including night shifts, overtime operations and Sundays and holidays, as may be necessary to ensure the performance of the Work within the

Milestone and Completion dates specified in the Owner-Contractor Agreement. If it becomes apparent to the Construction Program Manager, Design Consultant or Owner that the Work will not be completed within required Milestone or Completion dates, the Contractor agrees to undertake some or all of the following actions, at no additional cost to the Owner, in order to ensure, in the opinion of the Construction Program Manager, Design Consultant or Owner, that the Contractor will comply with all Milestone and Completion date requirements:

.1 increase manpower, materials, crafts, equipment and facilities to accelerate performance of the Work;
.2 increase the number of working hours per shift, shifts per working day, working days per week, or any combination of the foregoing; and
.3 reschedule activities to achieve maximum practical concurrence of accomplishment of activities.

4.12.2 In undertaking the actions required under paragraph 4.12.1, Contractor shall comply with the requirements for a Recovery Schedule as otherwise set forth in Contract Documents or in Project Manual at Division 1, Section 01320 of the General Requirements entitled "Construction Schedules and Reports".

4.12.3 If the schedule recovery actions taken by the Contractor are not satisfactory, the Construction Program Manager, Design Consultant or Owner may direct the Contractor to take any and all actions necessary to ensure completion within the required Milestone and Completion dates (which shall be at Contractor's sole expense), without additional cost to the Owner. In such event, the Contractor shall continue to assume responsibility for his performance and for completion within the required dates.

4.12.4 If, in the opinion of the Construction Program Manager, Design Consultant or Owner, the actions taken by the Contractor pursuant to this Article or the progress or sequence of Work are not accurately reflected on the Construction Schedule, the Contractor shall revise such schedule to accurately reflect the actual progress and sequence of Work.

4.12.5 Failure of the Contractor to substantially comply with the requirements of this Article and Division 1, Section 01320 of the General Requirements entitled "Construction Schedules and Reports", may be considered grounds for a determination by the Owner, pursuant to Article 14, that the Contractor is failing to prosecute the Work with such diligence as will ensure its completion within the time specified and that as a result, the Contractor is in material breach of the terms of the Contract Documents.

4.12.6 The Owner may, at its sole discretion and for any reason, other than when it becomes apparent to the Construction Program Manager, Design Consultant or Owner that the Work will not be completed within the required Milestone or Completion dates, require the Contractor to accelerate the Schedule of Performance by providing overtime, Saturday, Sunday and/or holiday work and/or by having all or any Subcontractors designated by the Owner provide overtime, Saturday, Sunday, and/or holiday work. In the

event that the Owner requires such acceleration a Change Order shall be issued in accordance with Article 12.

4.12.7 This paragraph 4.12 does not eliminate the Contractor's responsibility to comply with the local noise ordinances, all highway permit requirements and all other applicable laws, regulations, rules, ordinances, resolutions, and permit requirements.

4.13 DOCUMENTS AND SAMPLES AT THE SITE

4.13.1 The Contractor shall maintain at the site for the Owner one record copy of all Drawings, Specifications, Addenda, Change Orders and other Modifications, in good order and marked currently to record all changes made during construction, and approved Shop Drawings, Product Data and Samples. These shall be delivered to the Design Consultant for the Owner upon completion of the Work.

4.14 SHOP DRAWINGS, PRODUCT DATA AND SAMPLES

4.14.1 Shop drawings are drawings, diagrams, illustrations, schedules, performance charts, brochures, and other data which are prepared by the Contractor or subcontractor, manufacturer, supplier, or distributor to illustrate some portion of the Work. Refer to Specification Section 01330 of the General Requirements entitled "Submittals" for submittal procedures and requirements.

4.14.2 The General Contractor shall perform no portion of the Work requiring submittal and review of shop drawings, product data, samples or similar submittals until the respective submittal has been approved by the Architect. Such Work shall be in accordance with approved submittals.

4.15 EQUAL PRODUCTS AND SUBSTITUTIONS

4.15.1 The Contractor may prepare and submit to the Construction Program Manager for the Owner's review and approval any request for substitution far an unspecified product or material pursuant to Division 1, Section 01630 of the General Requirements entitled "Substitutions". This written request must utilize the “Product Substitution Request” form contained within the documents and shall be reviewed and approved by the Owner and their consultant prior utilization.

4.15.2 Subject to the provisions of any applicable laws, approval for substitutions or equal products shall be at the sole discretion of the Owner, shall be in writing to be effective, and the decision of the Owner shall be final. The Owner or Design Consultant may require tests of all materials proposed for substitution so submitted to establish quality standards, at the Contractor's expense. After approval of a substitution, if it is determined that the Contractor submitted defective information or data regarding the substitution upon which Owner's approval was based, and that unexpected or uncontemplated extensive redesign or rework of the project will be required in order to accommodate the substitution, or that the substituted item will not perform or function as

well as the specified item for which substitution was requested, the Contractor will be required to furnish the original specified item or request approval to use another substitution; the Contractor shall pay all costs, expenses or damages associated with or related to the unacceptability of such a substitution and the resultant utilization of another item and no time extension shall be granted for any delays associated with or related to such substitution

4.16 USE OF SITE

4.16.1 The Contractor shall confine operations at the site to areas provided by the Owner permitted by law, ordinances, permits, easements, right of way agreements and the Contract Documents. The Contractor shall not unreasonably encumber the site, in the opinion of the Owner or the Design Consultant, with any materials, equipment or trailers nor shall he block the entrances or otherwise prevent reasonable access to the site, other working and parking areas, completed portions of the Work and/or properties, storage areas, areas of other facilities that are adjacent to the worksite. If the Contractor fails or refuses to move said material, equipment or trailers within 24 hours of notification by the Owner, through the Design Consultant to so do, the Owner shall have the right, without further notice, to remove, at the Contractor's expense, any material, equipment and/or trailers which the Owner deems are in violation of this paragraph

4.17 CUTTING AND PATCHING OF WORK

4.17.1 The Contractor shall be responsible for all cutting, fitting or patching that may be required to complete the Work or to make its several parts fit together properly and in accordance with Division 1, Section 01731 of the General Requirements entitled "Cutting and Patching".

4.17.2 The Contractor shall not damage or endanger any portion of the Work or the work of the Owner or any separate contractors by cutting, patching or otherwise altering any work, or by excavation. The Contractor shall not cut or otherwise alter the work of the Owner or any separate contractor except with the written consent of the Owner and of such separate contractor. The Contractor shall not unreasonably withhold from the Owner or any separate contractor his consent to cutting or otherwise altering the Work. The Owner shall not be required to accept Work with a cut, splice, or patch when such cut, splice or patch is not generally accepted practice for the particular work involved or is otherwise unworkmanlike in the opinion of the Design Consultant, or the Owner.

4.17.3 Existing structures and facilities including but not limited to building, utilities, topography, streets, curbs, walks, etc., that are damaged or removed due to required excavations or other construction work, shall be patched, repaired or replaced by the Contractor to satisfaction of the Architect and the Owner of such structures and facilities and authorities having jurisdiction. In event the local jurisdictional authorities require that such repairing and patching be done with their own labor and materials, the Contractor shall abide by such regulations and pay for such work.

4.18 CLEANING UP

4.18.1 The Contractor at all times shall keep the premises free from accumulation of waste materials or rubbish caused by his operations. At the completion of the Work and before Final Payment is made, he shall remove all his waste materials and rubbish from and about the Project as well as all his tools, construction equipment, machinery and surplus materials.

4.18.2 If the Contractor fails to clean up during or at the completion of the Work, the Owner may do so as provided in Paragraph 6.3 and the cost thereof shall be charged to the Contractor.

4.19 COMMUNICATIONS

4.19.1 The Contractor shall generally forward its communications and communications from its Subcontractors, or to the Owner, through the Construction Program Manager.

4.20 ROYALTIES AND PATENTS

4.20.1 The Contractor shall pay all royalties and license fees. He shall defend all suits or claims for infringement of any patent rights and shall save the Owner harmless from loss, damages, costs or attorneys' fees on account thereof.

4.21 INDEMNIFICATION

4.21.1 To the fullest extent permitted by law, but as limited as provided by Article 4.21.5 below, the Contractor shall, at his sole cost and expense, indemnify, defend, and hold harmless the Owner, the Construction Program Manager and the Design Consultant and their agents, representatives, and employees from and against all claims, actions, judgments, costs, liabilities, penalties, damages, losses and expenses, including but not limited to attorneys' fees, arising out of or resulting from the performance of the Work, provided that any such claim, action, judgment, cost, liability, penalty, damage, loss or expense

(1) is attributable to bodily injury, sickness, disease or death, or to injury to or destruction of tangible property (other than the Work itself) including the loss of use resulting therefrom, and
(2) is caused, in whole or in part, by any negligent act or omission of the Contractor, any Subcontractor, anyone directly or indirectly employed by any of them or anyone for whose acts any of them may be liable, regardless of whether or not it is caused in part by a party indemnified hereunder. Such obligation shall not be construed to negate, abridge, or otherwise reduce any other right or obligation of indemnity which would otherwise exist as to any party or person described in this Paragraph 4.21. Contractor specifically agrees that it has included Fifty Dollars ($50.00) in its Bid price, over and above what it otherwise would have bid, to compensate Contractor for all indemnity obligations contained in the Contract Documents.

4.21.1.1 To the fullest extent permitted by law, but as limited as provided by Article 4.21.5 below, Contractor agrees to defend, indemnify and hold harmless the Owner, its School Board Members, Officers, employees and staff from any liability in the form of physical injury, death, or property damage resulting from Contractor's failure to comply with the Lunsford Requirements referenced in Article 4.3.7 above.

4.21.2 In any and all claims against the Owner, the Construction Program Manager or the Design Consultant or any of their agents, representatives, or employees by any employee of the Contractor, any Subcontractor, anyone directly or indirectly employed by any of them or anyone for whose acts any of them may be liable, the indemnification obligation under this Paragraph 4.21 shall not be limited in any way by any limitation on the amount or type of damages, compensation or benefits payable by or for the Contractor or any Subcontractor under workers' or workmen's compensation acts, disability benefit acts or other employee benefit acts.

4.21.3 No provision of this Paragraph 4.21 shall give rise to any duties on the part of the Construction Program Manager, the Design Consultant, the Owner, or any of their agents, representatives, or employees.

4.21.4 To the extent that a court of competent jurisdiction deems it necessary, if at all to limit the amount of the indemnification obligations set forth in this Article 4.21, it shall reform this Article to comply with the requirements of law, while maintaining the maximum amount of indemnification otherwise available to Owner as authorized by law and herein.

4.21.5 Notwithstanding anything in the Contract Documents to the contrary, all indemnity obligations set forth in the Contract Documents are limited to the monetary value stated as the Contract Sum, or one million dollars per occurrence, whichever is greater. None of the indemnity obligations shall be construed to require indemnification for the Owner's, Construction Program Manager's, or the Design Consultant's acts of gross negligence, or willful, wanton or intentional misconduct.

4.22 PERSONS AUTHORIZED TO SIGN DOCUMENTS

4.22.1 The Contractor, within five (5) days after the earlier of the date of a Notice to Proceed or the date of the Owner-Contractor Agreement, shall file with the Construction Program Manager a list of all persons who are authorized to sign documents such as Contracts, certificates, payment applications, releases and affidavits on behalf of the Contractor and to fully bind the Contractor to all the conditions and provisions of such documents. If requested, Contractor shall provide Owner with a certified copy of a resolution of the Board of Directors of the corporation in which are listed the names and titles of corporate personnel who are authorized to sign documents on behalf of the corporation and to fully bind the corporation to all the conditions and provisions of such documents.

4.23 CONDITIONS AFFECTING THE WORK

4.23.1 The Contractor shall be responsible for taking all steps necessary to ascertain the nature and location of the Work and the general and local conditions which can affect the Work or the cost thereof. Failure by the Contractor to fully acquaint himself with conditions which may affect the Work, including, but not limited to conditions relating to access, transportation, handling, storage of materials, availability of labor, water, roads, weather, topographic and subsurface conditions, Separate Prime Contractor conditions and schedules, applicable provisions of law, and the character and availability of equipment and facilities needed prior to and during the execution of the Work, shall not relieve the Contractor of his responsibilities under the Contract Documents and shall not constitute a basis for an adjustment in the Contract Sum or the Contract Time under any circumstances. The Owner assumes no responsibility for any understanding or representation about conditions affecting the Work made by any of its officers, employees, representatives, or agents prior to the execution of the Contract, unless such understandings or representations are expressly stated in the Contract Documents.

4.23.2 If in the execution of the Work any valuable items or materials of any kind are discovered at the Project site, such items or materials shall be the property of the Owner. The Contractor shall take reasonable precautions to prevent any persons from removing or damaging such items or materials and shall immediately upon discovery thereof and before removal, acquaint the Construction Program Manager and the Design Consultant with such discovery and carry out the Construction Program Manager and the Design Consultant's orders as to disposal and handling of the same.

END OF ARTICLE 4

ARTICLE 5

SUBCONTRACTORS

5.1 DEFINITION

5.1.1 A Subcontractor is a person or entity who has a direct Contract with the Contractor to perform any of the Work at the site. The term Subcontractor is referred to throughout the Contract Documents as if singular in number and masculine in gender and means a Subcontractor or his authorized representative. The term Subcontractor does not include any Separate Prime Contractor or its Subcontractors.

5.1.2 A Sub-Subcontractor is a person or entity who has a direct or indirect Contract with a Subcontractor to perform any of the Work at the site. The term Sub-Subcontractor is referred to throughout the Contract Documents as if singular in number and masculine in gender and means a Sub-Subcontractor or an authorized representative thereof.

5.1.3 Nothing contained in the Contract Documents is intended to, nor shall it create, any Contractual relationship between the Owner, the Construction Program Manager, the Design Consultant, or any of their agents, consultants, employees, independent Contractors, or representatives and any Subcontractor, Sub-Subcontractor, supplier or vendor of the Contractor, but the Owner shall be entitled to performance of all obligations intended for its benefit, and to enforcement thereof.

5.1.4 The Construction Program Manager and Design Consultant will not normally deal directly with any Subcontractor or Sub-Subcontractor or materials supplier. Communication will generally be made only through the Contractor. Subcontractor, Sub-Subcontractors or material suppliers shall route requests for information or clarification through the Contractor to the Construction Program Manager, who will direct them to the Design Consultant.

5.2 AWARD OF SUBCONTRACTS AND OTHER CONTRACTS FOR PORTIONS OF THE WORK

5.2.1 The Contractor, in compliance with the requirements of the Contract Documents, shall furnish to the Owner and the Construction Program Manager in writing the names of the qualified persons or entities (including those who are to furnish materials or equipment fabricated to a special design) proposed for each of the principal portions of the Work. The Construction Program Manager will promptly reply to the Contractor in writing stating whether or not the Owner after due investigation, has reasonable objection to any such proposed person or entity. Failure of the Construction Program Manager to reply within a reasonable time shall constitute notice of no reasonable objection. The Contractor understands and agrees that no Contractual agreement exists for any part of the Work under this Contract between the Owner, Construction Program Manager or

Design Consultant and any of the Contractor's Subcontractors or Sub-Subcontractors. Further, the Contractor understands and agrees that he alone is responsible to the Owner for all of the Work under this Contract and that any review of Subcontractors or Sub-Subcontractors by the Owner or Construction Program Manager will not in any way make the Owner or Construction Program Manager responsible to any Subcontractor, nor responsible for the actions or failures of any Subcontractor or Sub-Subcontractor.

5.2.1.1 The Contractor, in accordance with the Instructions to Bidders, shall furnish as part of their Proposal (Bid) submittal to the Owner on the "Subcontractor List" form provided, a list of names of the Subcontractors proposed for the principal portions of the Work. The Owner and Construction Program Manager will issue written notification to the Contractor of any objections of any proposed Subcontractor prior to Contract award.

5.2.2 The Contractor shall not Contract with any such proposed person or entity to which the Owner has made reasonable objection under the provisions of Subparagraph 5.2.1. The Contractor shall not be required to Contract with anyone to whom he has a reasonable objection. All such persons or entities must be qualified and meet the Lunsford Requirements set forth in Article 4.3.7.

5.2.3 If the Owner or the Construction Program Manager has reasonable objection to any proposed person or entity under Subparagraph 5.2.1, the Contractor shall name a substitute to whom the Owner or the Construction Program Manager has no reasonable objection. The Contract Sum shall be increased or decreased by the difference in cost occasioned by such substitution and an appropriate Change Order shall be issued, subject to an audit of said difference by the Owner; provided, however, that no increase in the Contract Sum shall be allowed for any such substitution unless the Contractor has acted promptly and responsively in submitting names as required by Subparagraph 5.2.1; or if the Owner or Construction Program Manager has stated said objection in writing before the submission by the Subcontractors of a proposal acceptable to Contractor; or if said Subcontractor is unable to enter into and carry out his work under his proposed Subcontract; or if said Subcontractor or its personnel working at the Project site shall fail to meet or maintain compliance with the Lunsford Requirements; or if said Subcontractor fails to comply with all applicable laws; or if the proposed Subcontractor is not an on-going business in the field of his proposed Subcontract; or if the proposed Subcontractor does not have a labor force and the means of supply compatible with the scope of the Subcontract.

5.2.4 If the Owner requires a change of any proposed Subcontractor or person or organization previously accepted by him, the Contract Sum shall be increased or decreased by the difference in cost occasioned by such change and an appropriate Change Order shall be issued, subject to an audit by Owner.

5.2.5 The Contractor shall make no substitution for any Subcontractor, person or entity previously selected if the Owner, the Construction Program Manager, or the Design Consultant makes reasonable objection to such substitution.

5.3 SUBCONTRACTUAL RELATIONS

5.3.1 By an appropriate agreement, written where legally required for validity, the Contractor shall require each Subcontractor, to the extent of the Work to be performed by the Subcontractor, to be bound to the Contractor by the terms of the Contract Documents, and to assume toward the Contractor all the obligations and responsibilities which the Contractor, by these Documents, assumes toward the Owner. Said agreement shall preserve and protect the rights of the Owner under the Contract Documents with respect to the Work to be performed by the Subcontractor so that the Sub-Contracting thereof will not prejudice such rights, and shall allow to the Subcontractor, unless specifically provided otherwise in the Contractor- Subcontractor agreement, the benefit of all rights, remedies and redress against the Contractor that the Contractor, by these Documents, has against the Owner. Where appropriate, the Contractor shall require each Subcontractor to enter into similar agreements with his sub-Subcontractors. The Contractor shall make available to each proposed Subcontractor, prior to the execution of the Sub-contract, copies of the Contract Documents to which the Subcontractor will be bound by this Paragraph 5.3, and identify to the Subcontractor any terms and conditions of the proposed Sub-contract which may be at variance with the Contract Documents. Each Subcontractor shall similarly make copies of such Documents available to his Sub-Subcontractors.

5.3.2 The provisions herein regarding Subcontractor approvals shall in no way affect the liability of the Contractor to the Construction Program Manager or Owner regarding performance of all obligations by or payment of Subcontractors. Approval to sub-contract and of any given Subcontractor shall not to any degree relieve the Contractor of his obligation to perform or have performed to the full satisfaction of the Owner all of the work required by this Contract.

5.4 QUALIFICATION SUBMITTALS

5.4.1 Specific qualification submittals may be required of Subcontractors, installers and suppliers for certain critical items of the Work. Required qualification submittals are set forth in detail in the Technical Specifications and shall be collected and submitted by the Contractor for review and approval by the Design Consultant. All information required of a single Subcontractor, installer or supplier shall be contained in a single, complete submittal. The Contractor shall submit the required qualification information within ten (10) days after receipt of the Design Consultant's request.

5.4.2 The Construction Program Manager, the Design Consultant, and the Owner shall reject any proposed Subcontractor, installer or supplier, or any qualification submittals related thereto, for the following reasons:

.1 the Contractor's failure to submit requested information within the specified time; or
.2 the Contractor's failure to provide all of the requested information; or

.3 the Contractor's submission of a Subcontractor, installer or supplier, or qualifications thereof, which are unacceptable in the judgment of the Owner, the Construction Program Manager, or Design Consultant; or

.4 Submission of an unqualified Subcontractor or one whose workforce does not meet the Lunsford Requirements set forth in Article 4.3.7.

5.4.3 Should the Construction Program Manager, the Design Consultant, and the Owner have reasonable objection to any proposed Subcontractor, installer or supplier, the Contractor shall submit another firm for approval by the Design Consultant, the Construction Program Manager, and Owner.

5.5 PREPARATORY WORK

5.5.1 Before starting any Section of Work, the responsible Subcontractor shall carefully examine all preparatory work that has been executed to receive his work. He shall check carefully, by whatever means are required, to ensure that his work and adjacent related work will finish to proper contours, planes and levels. He shall promptly notify the Contractor and the Construction Program Manager of any defects or imperfections in preparatory work which will, in any way, affect satisfactory completion of his Work. Absence of such notification will be construed as an acceptance of preparatory work and later claims of defects therein will not be recognized.

5.5.2 Under no condition shall a Section of Work proceed prior to preparatory work having been completed, cured, dried, and otherwise made satisfactory to receive such related work. Responsibility for timely installation of all materials rests solely with the Contractor, who shall maintain coordination control at all times.

END OF ARTICLE 5

ARTICLE 6

WORK BY OWNER OR BY SEPARATE CONTRACTORS

6.1 OWNER'S RIGHT TO PERFORM WORK AND TO AWARD SEPARATE CONTRACTS

6.1.1 The Owner reserves the right to perform work related to the Project with his own forces and to award Separate Prime Contracts in connection with other portions of the Project or other work on the site under these or similar Conditions of the Contract.

6.1.2 When Separate Prime Contracts are awarded for different portions of the Project or other work on the site, the term Contractor in the Contract Documents in each case shall mean the Contractor who executes each separate Owner-Contractor Agreement.

6.2 COORDINATION RESPONSIBILITY

6.2.1 The Contractor shall afford other Separate Prime Contractors, the Construction Program Manager and the Owner reasonable opportunity for the introduction and storage of their materials and equipment and the execution of their work and shall properly connect and coordinate the Work with that of the Owners, the Construction Program Manager and other Separate Prime Contractors to store his apparatus, materials, supplies and equipment in such orderly fashion at the site of the Work as will not unduly or unreasonably interfere with the progress of the Work or the work of any other Separate Prime Contractors.

6.2.1.1 If the execution or result of any part of the Work depends upon any work of the Owner or of any Separate Prime Contractor, the Contractor shall, prior to proceeding with the Work, inspect and promptly report to the Owner in writing any apparent discrepancies or defects in such work of the Owner or of any Separate Prime Contractor that render it unsuitable for such proper execution or result of any part of the Work.

6.2.1.2 Failure of the Contractor to so inspect and report shall constitute an acceptance of the Owner's or Separate Prime Contractor's work as fit and proper to receive the Work, except as to defects which may develop in the Owner's or Separate Prime Contractor's work after completion of the Work and which the Contractor could not have discovered by its inspection prior to completion of the Work.

6.2.2 Should the Contractor cause damage to the work or property of the Owner or of any Separate Prime Contractor on the Project, or to other work on the Site, or delay or interfere with the Owner's work on ongoing operations or facilities or adjacent facilities or said Separate Prime Contractor's work, the Contractor shall be liable for the same; and, in the case of a Separate Prime Contractor, the Contractor shall attempt to settle said

claim with such other Contractor prior to such other Contractor's institution of litigation or other proceedings against the Contractor. Contractor is reminded that these Contract Documents provide for direct trade to trade dispute resolutions as provided in Article 3.3.10 above.

6.2.2.1 If such Separate Trade Contractor sues the Owner or the Construction Program Manager or Design Consultant on account of any damage, delay or interference caused or alleged to have been caused by the Contractor, the Owner shall notify the Contractor, who shall defend, hold harmless and indemnify the Owner, the Construction Program Manager and Design Consultant in such proceedings at the Contractor's sole cost and expense. Owner shall have a right to select or approve its defense counsel in any such proceedings who shall be paid directly by Contractor. If any judgment or award is entered against the Owner, Construction Program Manager or Design Consultant, the Contractor shall satisfy the same and shall reimburse the Owner, Construction Program Manager and Design Consultant for all damages, expenses, attorneys' fees and other costs which the Owner, Construction Program Manager or Design Consultant incurs as a result thereof.

6.2.3 Should a Separate Prime Contractor cause damage to the Work or to the property of the Contractor or cause delay or interference with the Contractor's performance of the Work, the Contractor shall present directly to said Separate Prime Contractor any claims it may have as a result of such damage, delay or interference (with an information copy to the Owner) and shall attempt to settle its claim against said Separate Prime Contractor prior to the institution of litigation or other proceedings against said Separate Prime Contractor. Contractor shall otherwise comply with the requirements of Article 3.3.10 in bringing or defending any such claims.

6.2.3.1 In no event shall the Contractor seek to recover from the Owner, the Construction Program Manager, or the Design Consultant, and the Contractor hereby warrants to the Owner, Construction Program Manager and Design Consultant that it will not seek to recover from them, or any of them, any costs, expenses (including, but not limited to, attorney's fees) or damages or other losses incurred by the Contractor as a result of any damage to the Work or property of the Contractor or any delay or interference caused by any Separate Prime Contractor.

6.2.3.2 In order to carry out the intent of this Article 6, Contractor agrees that privity of Contract exists between Contractor and any Separate Prime Contractor, as defined herein, for the purpose of disposing of the liabilities or obligations which are imposed upon Contractor or any Separate Prime Contractor hereunder; and Contractor agrees to accept service of process and to sue and be sued in Contractor's own name in any litigation which may arise hereunder between Contractor and any Separate Prime Contractor.

6.2.4 Whenever Contractor receives items from a, vendor, materialman, Separate Prime Contractor or from Owner for storage, erection or installation, the Contractor receiving such items shall give receipt for items delivered, and thereafter will be held responsible for care, storage and any necessary replacing of item or items received.

6.2.5 When certain items of equipment and other work are indicated as "NIC" (not in Contract), or to be furnished and installed under other Separate Prime Contracts, any requirements for preparation of openings, provision of backing, etc., for receipt of such "NIC" work shall be furnished by the Contractor who shall properly form and otherwise prepare his work in a satisfactory manner to receive such "NIC" work.

6.3 OWNER'S RIGHT TO PERFORM DISPUTED WORK

6.3.1 If a dispute arises between the Contractor and Separate Prime Contractors as to their responsibility for cleaning up as required by Paragraph 4.18 or for accomplishing coordination or doing required cutting, filling, excavating or patching as required by Paragraph 4.17, the Owner may carry out such Work and charge the cost thereof to the Contractors responsible therefor as the Owner or the Construction Program Manager shall determine to be just and equitable in their sole and absolute discretion. Such determination shall be final.

6.4 COORDINATION OF THE WORK

6.4.1 By entering into this Contract, Contractor acknowledges that there may be other Separate Prime Contractors on the site whose work will be coordinated with that of his own. Contractor expressly warrants and guarantees that he will cooperate with other Separate Prime Contractors and will do nothing to delay, hinder or interfere with the work of other Separate Prime Contractors, the Owner, the Construction Program Manager or Design Consultant. Contractor also expressly agrees that, in the event his work is hindered, delayed, interfered with or otherwise affected by a separate Contractor, his sole remedy will be a direct action against the Separate Prime Contractor as described in this Article 6 and in Article 3.3.10. Contractor will have no remedy, and hereby expressly waives and releases any remedy, against the Owner and/or the Construction Program Manager or Design Consultant on account of delay, hindrance, interference or other damages caused by a Separate Prime Contractor.

END OF ARTICLE 6

ARTICLE 7

MISCELLANEOUS PROVISIONS

7.1 GOVERNING LAW

7.1.1 Unless otherwise provided in the Contract Documents, the Contract shall be governed by the law of the State of Florida. The sole and exclusive venue for any litigation arising from or related to this Contract or the Payment or Performance Bonds issued by the Contractor and its Surety, shall be in **St. Johns County**, Florida.

7.1.2 Each and every provision of law and clause required by law to be inserted in this Contract shall be deemed to be inserted herein and the Contract shall be read and enforced as though it were included herein. If through mistake or otherwise, any such provision is not inserted or is not correctly or fully inserted, then upon the application of either party, the Contract shall forthwith be physically amended to make such insertion, or in the absence of same, shall be inserted by a court of competent jurisdiction.

7.2 SUCCESSORS AND ASSIGNS

7.2.1 The Owner, Contractor and its Surety each binds himself, his partners, successors, assigns and legal representatives to the other party hereto and to the partners, successors, assigns and legal representatives of such other party in respect to all covenants, agreements and obligations contained in the Contract Documents. The Contractor shall not assign the Contract or sublet it as a whole without the written consent of the Owner, nor shall the Contractor assign any moneys due or to become due to him hereunder, without the previous written consent of the Owner and the Contractor's Surety.

7.3 CLAIMS AND DAMAGES

7.3.1 Should the Contractor suffer injury or damage to person or property because of any act or omission of the Owner, Construction Program Manager or Design Consultant, or of any of their employees, agents or others for whose acts either is legally liable, notice of same shall be given in writing to the Owner within 15 days after the first observance of such injury or damage; otherwise, the Contractor shall have waived and released any and all rights he may have against the Owner, the Construction Program Manager, the Design Consultant, or their employees, representatives and agents which are not otherwise covered by Contractor's indemnity obligations set forth in the Contract Documents.

7.4 PERFORMANCE BOND AND LABOR AND MATERIAL PAYMENT BOND

7.4.1 The Contractor shall furnish bonds covering the faithful performance of the Contract and the payment of all obligations and damages arising thereunder whether same be direct or indirect, real or consequential in a form and with a surety satisfactory to the Owner and who is listed on the United States' Treasury List of approved sureties. It is expressly agreed that the Surety shall be responsible for any delay or liquidated damages assessed against Contractor.

7.4.2 The Contractor is required to furnish in duplicate a Performance Bond and a Labor and Material Payment Bond, each in the amount of one-hundred percent (100%) of the Contract sum.

7.4.3 The Contractor and its Surety shall issue the Payment and Performance Bonds in the form attached hereto as part of the Contract Documents. The Contractor and its Surety shall be bound as otherwise described in the Contract Documents, including but not limited to the provisions of Article 3.5 above.

7.5 RIGHTS AND REMEDIES

7.5.1 The duties and obligations of the Contractor imposed by the Contract Documents and the rights and remedies of the Owner available thereunder shall be in addition to and not a limitation of any duties, obligations, rights and remedies otherwise imposed or available by law.

7.5.2 Except as may be specifically agreed in writing, the failure of the Owner, the Construction Program Manager, or the Design Consultant to insist in any one or more instances upon the strict performance of any one or more of the provisions of this Contract, or to exercise any right herein contained or provided by law, shall not be construed as a waiver or relinquishment of the performance of such provisions or right(s) or of the right to subsequently demand such strict performance or exercise such right(s), and the rights shall continue unchanged and remain in full force and effect.

7.5.3 The Contractor agrees that he can be adequately compensated by money damages for any breach of this Contract which may be committed by the Owner and hereby agrees that no default, act, or omission of the Owner, the Construction Program Manager or the Design Consultant, shall constitute a material breach of the Contract entitling the Contractor to cancel or rescind the provisions of this Contract or (unless the Owner shall so consent or direct in writing) to suspend or abandon performance of all or any part of the Work. The Contractor hereby waives and releases any and all rights and remedies to which he might otherwise be or become entitled, save only his right to money damages. Contractor hereby specifically agrees that it has an adequate remedy at law and is thus unentitled to injunctive relief in the event Owner should materially breach the Contract.

7.6 TESTS

7.6.1 If the Contract Documents, laws, ordinances, rules, regulations or orders of any public authority having jurisdiction require any portion of the Work to be inspected, tested, or approved, the Contractor shall give the Construction Program Manager timely notice of its readiness so the Design Consultant and the Construction Program Manager may observe such inspection, testing or approval. The Contractor shall bear all costs of such inspections, tests or approvals conducted by public authorities. Unless otherwise provided, the Owner shall bear all costs of other inspections, tests or approvals.

7.6.1.1 Unless otherwise stipulated in other Contract Documents, the Contractor shall pay for all utilities required for testing of installed equipment of all of his work and work of each Subcontractor. Boiler fuel other than gas shall be provided by Subcontractor furnishing boilers. Labor and supervision required for making such tests shall be provided at no additional cost to the Owner.

7.6.2 If the Design Consultant or the Construction Program Manager determine that any Work requires special inspection, testing, or approval which Subparagraph 7.6.1 does not include, the Construction Program Manager will instruct the Contractor to order such special inspection, testing or approval, and the Contractor shall give notice as provided in Subparagraph 7.6.1. If such special inspection or testing reveals a failure of the Work to comply

(1) with the requirements of the Contract Documents, or
(2) with respect to the performance of the Work, with laws, ordinances, rules, regulations, or orders of any public authority having jurisdiction, the Contractor shall bear all costs thereof, including compensation for the Design Consultant's and the Construction Program Manager's and Design Consultant's additional services made necessary by such failure.

7.6.3 Inspections and tests required to establish compliance with the Contract Documents, as provided for in the Contract Documents, will be made by a pre-qualified, independent testing agency selected by the Owner. The cost of the initial services of such agency will be paid by the Owner. When the initial tests indicate non-compliance with the Contract Documents, any subsequent testing occasioned by non-compliance shall be performed by the same agency and the cost thereof shall be borne by the Contractor. Representatives of the testing agency shall have access to the Work at all times. The Contractor shall provide facilities for such access in order that the agency may properly perform its functions.

7.6.4 The independent testing agency, employed by the Owner, shall prepare the test reports, logs, and certificates applicable to the specific inspections and tests and promptly deliver the specified number of copies to the designated parties. Certificates of inspection, testing or approval required by public authorities shall be secured by the Contractor and promptly delivered by him to the Owner, in adequate time to avoid delays in the Work or final payment therefor.

7.6.5 If the Design Consultant or the Construction Program Manager is to observe the inspections, tests or approvals required by the Contract Documents, laws, ordinances, rules, regulations, or order of any public authority having jurisdiction or that are required to establish compliance with the Contract Documents, he will do so promptly and, where practicable, at the normal place of testing.

7.6.6 The Contractor shall pay for and have sole responsibility for inspections or testing performed exclusively for his own convenience.

7.7 UNENFORCEABILITY OF ANY PROVISION

7.7.1 If any provision of this Contract is held as a matter of law to be unenforceable, against public policy or unconscionable, that provision shall be amended by the Court to make it compliant with the requirements of law and thereafter be enforced, or if required by law, it shall be deleted from the Contract Documents in its entirety. The remainder of the Contract shall remain enforceable, either as amended by the Court or without such unenforceable provision if deleted by the Court as outlined in this paragraph.

7.8 ATTORNEYS' FEES AND OTHER EXPENSES

7.8.1 The Contractor hereby agrees that he will certify, under oath, the validity of each and every claim, including both the entitlement to the claim under these Contract Documents and the amount thereof and that it will not submit, assert, litigate or otherwise pursue any frivolous or unsubstantiated claim or claims. Contractor further agrees that it will has specifically waived certain types of claims herein under the terms of the Contract Documents and that the assertion of any claims for items waived or released in the Contract Documents or for damages that are not due under the terms of the Contract Documents shall constitute a False Claim in violation of the requirements of this Contract and Florida's False Claims Act. In the event that the Contractor submits any False Claim or claims, as defined herein, then in such event the Contractor hereby agrees that it shall forfeit its right to collect damages as to its entire claim(s), including the non-false portions of its claim(s). Contractor hereby agrees that the submission of a False Claim, as defined herein, shall create a complete defense to any claim of the Contractor in its entirety. The Contractor shall reimburse the Owner, Construction Program Manager or Design Consultant for all costs and expenses associated with defending such False Claim(s), including but not limited to, attorneys' fees, paralegal expenses, audit costs, accountants' fees, expert witness' fees, additional Construction Program Manager or Design Consultant expenses, whether incurred at trial or on appeal.

7.8.2 If the Contractor breaches any obligation under the Contract Documents, the Contractor shall reimburse the Owner and Construction Program Manager and Design Consultant for all costs and expenses incurred by the Owner in defending any claim(s) asserted by the Contractor, including but not limited to attorneys' fees, audit costs, accountants' fees, expert witness' fees, additional Construction Program Manager and Design Consultant expenses and any other consultant, legal, paralegal fees, expenses or costs, whether at trial or on appeal.

7.8.3 If the Owner, Construction Program Manager or Design Consultant prevails in a claim brought against the Contractor, including but not limited to, claims for fraud or misrepresentation, presentation of a False Claim, overpayment, defective work, liquidated or delay damages, and recovery of termination expenses, the Contractor shall reimburse the Owner and Construction Program Manager and Design Consultant for all costs and expenses incurred by them relating to the lawsuit, including but not limited to, attorneys' fees, paralegal costs, audit costs, accountants' fees, expert witness' fees, additional Construction Program Manager and Design Consultant expenses, and any other fees, costs or expenses, whether incurred at trial or on appeal.

END OF ARTICLE 7

ARTICLE 8

TIME

8.1 DEFINITIONS

8.1.1 Unless otherwise provided, the Contract Time is the period of time allotted in the Contract Documents for Final Completion of the Work as defined in Subparagraph 8.1.4, including authorized adjustments thereto. The Contractor shall finally complete his Work within Contract Time.

8.1.2 The date of commencement of the Work is the date established in a Notice to Proceed. If there is no Notice to Proceed, it shall be the date of the Owner-Contractor Agreement or such other date as may be established therein. The Contractor shall not mobilize, commence Work or store materials or equipment on site until:

(1) written Notice to Proceed is issued;
(2) all bonds and Certificates of Insurance have been executed, delivered to and accepted by the Owner;
(3) Contractor has delivered to Owner his as-planned schedule, original job cost estimate, list of Subcontractors and corporate resolution designating his representative;
(4) or until the Contractor otherwise receives the Owner's or Construction Program Manager's written consent.

8.1.3 The Date of Substantial Completion of the Work is the Date certified by the Design Consultant and the Construction Program Manager when the Work is sufficiently complete, in accordance with the Contract Documents, so the Owner can fully occupy and utilize the Work for the use for which it is intended, with all of the Project's parts and systems operable as required by the Contract Documents. Only incidental corrective work and any final cleaning beyond that needed for the Owner's full use may remain for final completion.

8.1.4 The date of Final Completion of the Work is the date certified by the Construction Program Manager, the Design Consultant and the Owner when the Work is totally complete, to include all items listed on the inspection report following substantial completion inspection, in accordance with the Contract Documents and the Owner may fully occupy and utilize all of the Work for the use for which it is intended.

8.1.5 The term day as used in the Contract Documents shall mean calendar day unless otherwise specifically designated. All dates shall mean midnight of the indicated day unless otherwise stipulated.

8.2 PROGRESS AND COMPLETION

8.2.1 All time limits stated in the Contract Documents are of the essence of the Contract.

8.2.2 The Contractor shall begin the Work on the date of commencement as defined in Subparagraph 8.1.2. He shall carry the Work forward expeditiously with adequate forces and shall achieve Substantial Completion and Final Completion within the time frames stated in the Contract Documents.

8.2.3 If a date or time of completion is included in the Contract, it shall be the Date of Final Completion as defined in Subparagraph 8.1.4, including authorized extensions thereto, unless otherwise provided.

8.2.4 SPECIFIC DATES

The Owner-Contractor Agreement contains certain specific dates within Article 4 in addition to date of Notice to Proceed. These dates shall be adhered to and are the last acceptable dates unless modified by a Change Order executed by and between the Contractor and the Owner. All dates indicate midnight unless otherwise stipulated. The only exceptions to this schedule are defined in paragraph 8.3, DELAYS AND EXTENSIONS OF TIME.

8.3 DELAYS AND EXTENSIONS OF TIME

8.3.1 The time during which the Contractor is delayed in the performance of the Work, by the acts or omissions of the Owner, the Construction Program Manager, the Design Consultant or their employees or agents, acts of god, unusually severe and abnormal climatic conditions, fires, floods, epidemics, quarantine restrictions, strikes, riots, civil commotions or freight embargoes, or other conditions beyond the Contractor's control and which the Contractor could not reasonably have foreseen and provided against, shall be added to the time for completion of the Work (i.e., the Contract Time) stated in the Agreement; provided, however, that no claim by the Contractor for an extension of time for delays will be considered unless made in compliance with the requirements of this Article and other provisions of the Contract Documents. Contractor agrees that a change in the Contract Time may only be authorized by a written Change Order authorized and executed by the **St. Johns County School Board**. No person has authority to orally or in writing grant any change in the Contract Time except as stated herein.

8.3.2 Neither the Owner, the Construction Program Manager, nor the Design Consultant shall be obligated or liable to the Contractor for, and the Contractor hereby expressly waives and releases any claims against the Owner, the Construction Program Manager and the Design Consultant on account of any indirect or direct damages, costs or expenses of any nature which the Contractor, its Subcontractors, or Sub-Subcontractors or any other person may incur as a result of any delays, interferences, changes in sequence or the like, which are reasonable, foreseeable, contemplated, or avoidable by Contractor,

arising from or out of any act or omission of the Owner, the Contract Program Manager or the Design Consultant, or their agents, employees, consultants, Separate Prime Contractors or any governmental representative, it being understood and agreed that the Contractor's sole and exclusive remedy in any such events shall be an extension of the Contract Time, but only as determined in accordance with the provisions of the Contract Documents.

8.3.3 The Contract Time shall be adjusted only for changes pursuant to Paragraph 12.1, suspension of Work pursuant to Paragraph 3.4 and excusable delays pursuant to Subparagraph 8.3.4. In the event the Contractor requests an extension of the Contract Time, he shall furnish such justification and supporting evidence as the Owner may deem necessary for a determination of whether or not the Contractor is entitled to an extension of time under the provisions of the Contract, and shall further conform to all of the requirements of Specification Section 01311, “Construction Schedules and Reports”. The burden of proof to substantiate a claim for an extension of the Contract Time shall rest with the Contractor, including evidence that the cause was beyond his control. The Owner shall base his findings of fact and decision on such justification and supporting evidence and shall advise the Contractor in writing thereof. If the Owner finds that the Contractor is entitled to any extension of the Contract Time, the Owner's determination of the total number of days extension shall be based upon the currently approved progress schedule and on all data relevant to the extension. Such data will be incorporated into the schedule in the form of a revision thereto, accomplished in a timely manner. The Contractor acknowledges and agrees that actual delays (due to said changes, suspension of Work or excusable delays) in activities which, according to the schedule, do not affect the Contract Time, do not have any effect upon the Contract Time and therefore will not be the basis for a change therein. The Contractor acknowledges and agrees that time extensions will be granted only to the extent that excusable delays exceed the available float in the Contractor's schedule. The Contractor acknowledges and agrees that all available float in the Contractor's as-planned schedule(s) belongs to the Owner and may be utilized, without additional cost, by the Owner.

8.3.3.1 Extensions in the Contract Time authorized by Change Orders are subject to extension-of-time audit by the Construction Program Manager as follows:

The Contractor agrees that, even though the Owner, Contractor and Design Consultant have previously signed a Change Order containing an extension-of-time resulting from a change in or addition to the Work that said extension in the Contract Time may be adjusted by an audit conducted, after the fact by the Construction Program Manager. If such an audit is to be made, the Construction Program Manager must undertake the audit and make a ruling within 30 days after the completion of the Work under the Change Order and an appropriate request is made as set forth below.

The Contractor agrees that any extension of the Contract Time to which he is entitled arising out of a change order undertaken on a force accounting (labor and materials) basis, shall be determined by an extension-of-time audit by the Construction Program

Manager after the Work of the Change Order is completed. Such rulings shall be made by the Construction Program Manager within 30 days after a request for same is made by the Contractor, Owner or Design Consultant, except said 30 days will not start until the Work under the Change Order is completed and the request is made.

8.3.4 Subject to other provisions of the Contract, the Contractor may be entitled to an extension of the Contract Time (but no increase in the Contract Sum) for delays arising from unforeseeable causes beyond the control and without the fault or negligence of the Contractor, his Subcontractors or suppliers as follows:

.1 labor disputes and strikes (including strikes affecting transportation), that do, in fact, directly and critically affect the progress of the Work; however, an extension of Contract Time on account of an individual labor strike shall not exceed the number of days of said strike;

.2 acts of God, tornado, war, fire, hurricane, blizzard, earthquake, typhoon, or flood that damage completed work or stored materials;

.3 abnormal inclement weather; however, the Contract Time will not be extended due to normal inclement weather. The time for performance of this Contract, as stated in the Contract Documents, includes an allowance for calendar days which may not be available for construction out-of-doors; for the purposes of this Contract, the Contractor agrees that said number of calendar days per month are to be considered as normal inclement weather. Unless the Contractor can substantiate to the satisfaction of the Owner that there was greater than normal inclement weather considering the full term of the Contract Time using a ten year average of accumulated record mean values from climatological data compiled by the U.S. Department of Commerce, National Oceanic and Atmospheric Administration for the locale of the Project and that such alleged greater than normal inclement weather actually delayed the Work or portions thereof which had an effect upon the Contract Time, the Contractor shall not be entitled to an extension of time. If the total accumulated number of calendar days lost due to inclement weather, from the start of Work until Substantial Completion, exceeds the total accumulated number to be expected for the same period from the aforesaid table, time for completion will be extended by the number of calendar days needed to include the excess number of calendar days lost.

.4 acts of war, acts of the state, Federal or local government in its sovereign capacity, and acts of a Separate Prime Contractor in the performance of a Contract with the Owner relating to the Project, after proper coordination by Contractor. Contractor shall not be entitled to an extension of the Contract Time for delays occasioned by its failure to properly coordinate with any Separate Prime Contractor.

8.3.5 The Contractor shall not be entitled to and hereby expressly waives any extension of time resulting from any condition or cause unless said claim for extensions of time is made in writing to the Construction Program Manager within seven (7) days of the first instance of delay. Circumstances and activities leading to such claim shall be indicated or referenced in a daily field inspection report for the day(s) affected; otherwise, all such

claims are waived and released by the Contractor. In every such written claim, the Contractor shall provide the following information:

.1 Nature of the delay;
.2 Date (or anticipated date) of commencement of delay;
.3 Activities on the progress schedule affected by the delay, and/or new activities created by the delay and their relationship with existing activities;
.4 Identification of person(s) or organization(s) or event(s) responsible for the delay;
.5 Anticipated extent of the delay; and
.6 Recommended action to avoid or minimize the delay.

8.3.6 For the purpose of this Contract, the Contractor agrees that he may expect inclement weather for the number of calendar days in accordance with the following table:

	0.1 in. Precipitation, or more;	32 Degrees F., or less
Jan	_10___	_3___
Feb	_10___	_1___
Mar	_10___	_0___
Apr	__9__	_0___
May	_10___	_0___
June	__9__	_0___
July	_11___	_0___
Aug	_10___	_0___
Sept	__8__	_0___
Oct	__7__	_0___
Nov	__8__	_0___
Dec	__9__	_1___

Also the Contractor agrees that the measure of abnormal inclement weather during the period covered by this Contract shall be the number of days in excess of those shown for each month in the table above, in which precipitation exceeded .10 inch, or in which the highest temperature was 32 degrees F. or less from Jacksonville International Airport, FL-NWS Station, over the same period of time, which is the same source of data used to determine normal inclement weather losses. If the total accumulated number of calendar days lost to inclement weather, from the start of work until the building is enclosed, exceeds the total accumulated number to be expected for the same period from the table above, time for completion will be extended by the number of calendar days needed to include the excess number of calendar days lost. No extension of time will be made for days due to weather occurring after the building is enclosed. For the purpose of this Contract, the term "enclosed" is defined to mean when the building is sufficiently roofed and sealed, either temporarily or permanently, to permit the structure to be heated and the plastering or dry-wall trades to work. The Construction Program Manager shall determine when the structure is "enclosed". Upon request of the Contractor, the Construction Program Manager shall issue a letter certifying to the Owner, with a copy to the Contractor, stating the date the building became enclosed. No

change in Contract Sum will be authorized because of adjustment of Contract Time due to weather.

The occurrence of inclement weather which prohibits the prosecution of the Work specifically at the jobsite is also to be document on a daily basis by the Contractor on the "Project Rainday Form" attached to Section 01010 of the General Requirements entitled "Summary of Work". Any and all claims of inclement weather are to be certified by a representative on the Owner, copies of this form is to be submitted with the Contractor's Application for Payment.

8.3.7 If no schedule or agreement is made stating the dates upon which written interpretations as set forth in Paragraph 2.2 shall be furnished, then no claim for delay shall be allowed on account of failure to furnish such interpretations until twenty days after demand is made for them, and not then unless such claim is reasonable.

8.3.8.1 If the said Contractor shall neglect, fail or refuse to complete the Work within the time herein specified, or any proper extension thereof granted by the Owner, then the Contractor does hereby agree, as a part consideration for the awarding of this Contract, to pay the Owner the amount specified in the Contract, not as a penalty but as liquidated damages for such breach of Contract as hereinafter set forth, for each and every calendar day that the Contractor shall be in default after the time stipulated in the Contract for completing the work.

8.3.8.2 The said amount is fixed and agreed upon by and between the Contractor and the Owner because of the impracticability and extreme difficulty of fixing and ascertaining the actual damages the Owner would in such event sustain, and said amount is agreed to be the amount of damages which the Owner may sustain and said amount shall be retained from time to time by the Owner from current periodical estimates.

8.4 RESPONSIBILITY FOR COMPLETION

8.4.1 The Contractor shall furnish such manpower, materials, facilities and equipment and shall work such hours, including night shifts, overtime operations and Sundays and holidays, as may be necessary to insure the progress and completion of the Work in accordance with the approved and currently updated progress schedule. If Work actually in place falls behind the currently updated and approved progress schedule and it becomes apparent from the current schedule that the Work will not be completed within the Contract Time, the Contractor agrees that he will, as necessary, take some or all of the following actions at no additional cost to the Owner, as required to eliminate the backlog of Work:

.1 increase manpower in quantities and crafts as necessary;
.2 increase the number of working hours per shift, shifts per day, working days per week, the amount of equipment, or any combination of the foregoing; and/or
.3 reschedule activities to achieve maximum practical concurrence.

8.4.2 The Construction Program Manager may require the Contractor to submit a recovery schedule in accordance with Section 01311 of the Specifications, demonstrating his program and proposed plan to make up the lag in scheduled progress and to ensure completion of the Work within the Contract Time. If the Construction Program Manager finds the proposed plan not acceptable, he may require the Contractor to submit a new plan. If the actions taken by the Contractor or the second plan proposed are not satisfactory, the Construction Program Manager may require the Contractor to take any of the actions set forth in this Paragraph 8.4 without additional cost to the Owner, to make up the lag in scheduled progress.

8.4.3 Failure of the Contractor to substantially comply with the requirements of this Paragraph 8.4 may be considered grounds for a determination by the Owner, pursuant to Article 14, that the Contractor is failing to prosecute the Work with sufficient diligence to ensure its completion within the Contract Time.

8.5 LIQUIDATED DAMAGES FOR DELAY

8.5.1 The damages incurred by the Owner due to the Contractor's failure to complete the Work within required Milestone dates and the Contract Time, including any extensions thereof, shall be in the amount set forth in the Owner-Contractor Agreement, for each consecutive calendar day beyond the Milestone dates or the Contract Time (Sundays and all holidays included) for which the Contractor shall fail to complete the Work.

END OF ARTICLE 8

ARTICLE 9

PAYMENTS AND COMPLETION

9.1 CONTRACT SUM

9.1.1 The Contract Sum is stated in the Owner-Contractor Agreement and, including authorized adjustments thereto, is the total amount payable by the Owner to the Contractor for the performance of the Work under the Contract Documents.

9.2 SCHEDULE OF VALUES

9.2.1 As part of the pre-construction submittals, and before the first Application for Payment, the Contractor shall submit to the Owner a schedule of values allocated to the various portions of the Work, as set forth in Division 1, Section 01270 of the General Requirements entitled "Applications for Payment" and supported by such data to substantiate its accuracy as the Construction Program Manager and the Owner may require. This schedule, unless objected to by the Owner, shall be used as a basis for the Contractor's Applications for Payment and only for this purpose. If approved by the Owner, the Contractor may include in his schedule of values a line item for mobilization which shall include a reasonable amount of mobilization for the Contractor and his Subcontractors. The Contractor shall not front-end load his schedule of values, and such schedule shall set forth Contractor's best evaluation of the value of the various segments of the Work. Surety hereby consents to, agrees and accepts Contractor's schedule of values. Contractor’s Surety does hereby further agree and consent to all payments made to Contractor, save and except for payments, made after the Surety has notified Owner, in writing, that it withholds consent to any future payments. As a result of the foregoing, Surety shall not assert and hereby waives, as a defense in any action by Owner, that the Owner overpaid the Contractor.

9.3 APPLICATIONS FOR PAYMENT

9.3.1 As conditions precedent to any payment by Owner to Contractor, Contractor shall, as required by the Contract Documents and in accordance with Division 1, Section 01270 of the General Requirements entitled "Applications for Payment", submit to the Construction Program Manager an itemized Application for Payment, notarized if required, supported by such data substantiating the Contractor's right to payment as the Construction Program Manager and the Design Consultant may require, including but not limited to the Contractor's certification that all work for which payment is requested has been completed in full in accordance with the Contract Documents, and reflecting retainage, if any, as provided elsewhere in the Contract Documents. As an additional condition precedent to the Owner’s liability for any progress or final payment under the terms of the Contract Documents, the Contractor shall also pay all sums due and payable to its laborers, Subcontractors and materialmen for which previous certificates

for payment were issued and payments received from the Owner and so certify such payments, under oath, to Owner.

9.3.2 Pursuant to the requirements of F.S. 255.078 (5) the Owner and Contractor hereby agree to the following schedule for the release of retainage. The Owner shall retain ten percent of the amount of all progress payments until the Work is fifty percent completed, including all change orders and approved alternates, as determined by the approved and paid payment applications. Upon fifty percent completion, the retainage withheld from future payment applications will be reduced to five percent until the project has been Finally Completed and accepted by the Owner. When fifty percent completion is attained, the Contractor may request a reduction of its retainage by up to one-half. This reduction shall be allowed as a one-time reduction permitted to be requested by the Contractor in conjunction with the first payment application submitted by the Contractor immediately after completion of fifty percent of the Work. No additional request for retainage reduction shall be submitted by the Contractor or given by the Owner during the course of the Project's completion, except upon Final Payment. Notwithstanding anything to the contrary contained herein, the Owner shall not be required to reduce the amount of retainage if there should be any asserted or unasserted disputes or claims made or pending between the Owner, including but not limited to its agents and representatives, and the Contractor

9.3.3 Payments may be made by the Owner at his discretion, on account of materials or equipment not incorporated in the Work but delivered and suitably stored at the site by the Contractor. Payments for materials or equipment stored on the site shall only be considered upon submission of the Contractor of satisfactory evidence (for example, releases or paid invoices from the Seller) that he has acquired title to such material, that it will be utilized on the Work under this Contract and that it is satisfactorily stored, protected, and insured or that other procedures satisfactory to the Owner that will protect the Owner's interests have been taken. Materials once paid for by the Owner become the property of the Owner and may not be removed from the work site without the Owner's written permission.

9.3.3.1 Owner will be under no obligation to make payment to the Contractor on account of materials or equipment not incorporated in the Work but delivered and stored at the site unless the Contractor, in his Schedule of Values, includes line items for such delivered and stored materials or equipment.

9.3.3.2 It is specifically understood and agreed that an inspection and approval of the materials by the Owner, Construction Program Manager, the Design Consultant or any agency retained by any of them shall not in any way subject the Owner to pay for the said materials or any portion thereof, even though incorporated in the Work, if said materials shall in fact turn out to be unfit to be used in the Work, nor shall such inspection be considered as any waiver of objection to the Work on account of the unsoundness or imperfection of the material used.

9.3.3.3 Unless otherwise provided for elsewhere in the Contract Documents, no payments will be made for any materials or equipment stored off or away from the Project site.

9.3.4 The Contractor warrants that title to all Work, materials and equipment covered by an Application for Payment will pass to the Owner, either by incorporation in the construction or upon the receipt of payment by the Contractor, whichever occurs first, free and clear of all liens, claims, security interests or encumbrances, hereinafter referred to in this Article 9 as "liens"; and that no Work, materials or equipment covered by an Application for Payment will have been acquired by the Contractor, or by any other person performing Work at the site or furnishing materials and equipment for the Project, subject to an agreement under which an interest therein or an encumbrance thereon is retained by the seller or otherwise imposed by the Contractor or such other person.

9.4 CERTIFICATES FOR PAYMENT

9.4.1 The Design Consultant and the Construction Program Manager will, after receipt of the Contractor's Application for Payment, and within the time set forth in Division 1, Section 01270 of the General Requirements entitled "Applications for Payment", either jointly issue a Certificate for Payment to the Owner, with a copy to the Contractor, for such amount as the Construction Program Manager and the Design Consultant determine is properly due, or notify the Contractor in writing of their reasons for withholding a Certificate as provided in Subparagraph 9.6.1. The Design Consultant shall at all times seek the advice of the Construction Program Manager regarding said applications for payment.

9.4.2 The submission and approval of the progress schedule and monthly updates thereof as required by Division 1, Section 01270 of the General Requirements entitled "Applications for Payment", shall be an additional condition precedent to the processing and payment of any Application for Payment. The Contractor shall be entitled to progress payments only as determined from the currently approved and updated schedule.

9.4.3 The signing of a Certificate for Payment will constitute a representation by the Construction Program Manager and the Design Consultant to the Owner, based on their observations at the site pursuant to their agreements with the Owner, and the data comprising the Application for Payment, that the Work has progressed to the point indicated; that, to the best of their knowledge, information and belief, the quality of the Work is in accordance with the Contract Documents (subject to an evaluation of the Work for conformance with the Contract Documents upon Substantial Completion, to the results of any subsequent tests required by or performed under the Contract Documents, to minor deviations from the Contract Documents correctable prior to completion, and to any specific qualifications stated in their Certificate); and that the Contractor is entitled to payment in the amount certified. However, by signing a Certificate for Payment, the Construction Program Manager and the Design Consultant shall not thereby be deemed to represent that either has made exhaustive or

continuous on-site inspections to check the quality or quantity of the Work or that either has reviewed the construction means, methods, techniques, sequences, or procedures, or that either has made any examination to ascertain how or for what purpose the Contractor has used the moneys previously paid on account of the Contract Sum. Notwithstanding any such certification, should it be subsequently determined that the Contractor's Work is not in strict accordance with the requirements of the Contract Documents, Contractor shall be required to correct all such defects and deficiencies.

9.5 PROGRESS PAYMENTS

9.5.1 After a Certificate for Payment has been issued, the Owner shall make payment in the manner and within the time provided in the Contract Documents.

9.5.2 The Contractor shall promptly pay each Subcontractor (including suppliers, laborers, and material-men) performing labor or furnishing material for the Work, upon receipt of payment from the Owner, out of the amount paid to the Contractor on account of such Subcontractor's Work, the amount to which said Subcontractor is entitled, reflecting the percentage actually retained, if any, from payments to the Contractor on account of such Subcontractor's Work. The Contractor shall, by an appropriate agreement with each Subcontractor, also require each Subcontractor to make payments to his Sub-Subcontractors in a similar manner.

9.5.3 The Owner may, on request and at his discretion, furnish to any Subcontractor, if practicable, information regarding the percentages of completion or the amounts applied for by the Contractor and the action taken thereon by the Construction Program Manager or the Design Consultant on account of Work done by such Subcontractor.

9.5.4 Neither the Owner, the Construction Program Manager, nor the Design Consultant shall have any obligation to pay or to see to the payment of any moneys to any Subcontractor or materialman.

9.5.5 No Certificate for a progress payment, nor any progress payment, nor any partial or entire use or occupancy of the Project by the Owner, shall constitute an acceptance of any Work not in accordance with the Contract Documents.

9.5.6 Contractor acknowledges that he may not lien Owner's interest in the Project site, pursuant to Florida law. Contractor agrees to advise all Subcontractors and materialmen of the non-lienable nature of the Project and to further furnish each such person or entity a copy of the Labor and Material Payment Bond for the Project.

9.6 PAYMENTS WITHHELD

9.6.1 The Design Consultant and the Construction Program Manager may decline to certify payment and may withhold their Certificate in whole or in part, to the extent necessary reasonably to protect the Owner, if in their opinion they are unable to make representations to the Owner as provided in Subparagraph 9.4.3. If the Construction

Program Manager and the Design Consultant are unable to make representations to the Owner as provided in Subparagraph 9.4.3 and to certify payment in the amount of the Application, they will notify the Contractor as provided in Subparagraph 9.4.1. If the Contractor and the Design Consultant cannot agree on a revised amount, the Construction Program Manager and the Design Consultant will promptly issue a Certificate for Payment for the amount for which they are able to make such representations to the Owner. The Design Consultant and the Construction Program Manager may also decline to certify payment or because of subsequently discovered evidence or subsequent observations, they may nullify the whole or any part of any Certificate for Payment previously issued to such extent as may be necessary in their opinion to protect the Owner from loss, because of:

.1 defective work not remedied,
.2 third party claims filed, whether in court, in arbitration or otherwise, or reasonable evidence indicating the probability of filing of such claims,
.3 failure of the Contractor to make payments properly to Subcontractors or for labor, materials or equipment,
.4 reasonable evidence that the Work cannot be completed for the unpaid balance of the Contract Sum,
.5 damage to the Owner or another Contractor,
.6 reasonable evidence that the Work will not be completed within the Contract Time, or within any Contract Milestones as established in the Contract Documents,
.7 failure or refusal of the Contractor to carry out the Work in accordance with or to otherwise substantially or materially comply with the Contract Documents,
.8 failure or refusal of the Contractor to properly schedule and coordinate the Work, to provide progress schedules, reports and updates, or to otherwise fully comply with Division 1, Section 01027 of the General Requirements entitled "Applications for Payment", or
.9 failure or refusal of the Contractor to fully comply with the provisions of Article 6.2 requiring the Contractor to direct certain claims to Separate Prime Contractors and to defend and indemnify the Owner, the Construction Program Manager and/or the Design Consultant in the event a Separate Prime Contractor files a claim against Owner for the actions or omissions of the Contractor.

9.6.2 When the above grounds in Subparagraph 9.6.1 are removed, payment shall be made, if otherwise authorized in accordance with the terms of the Contract Documents, for amounts withheld because of them.

9.7 FAILURE OF PAYMENT

9.7.1 If the Owner does not make payment to the Contractor within the forty (40) calendar days after receipt of the Contractor's Approved Application for Payment by the Design Consultant and the Construction Program Manager, through no fault of the Contractor, and the Owner otherwise is not entitled under the Contract Documents or applicable law to withhold payment, then the Contractor may, upon seven (7) additional days'

written notice to the Owner and the Construction Program Manager, stop the Work until payment of the amount owing according to the Contract Documents has been received.

9.8 SUBSTANTIAL COMPLETION

9.8.1 When the Contractor considers that the Work, is substantially complete as defined in Subparagraph 8.1.3, the Contractor shall prepare for submission to the Owner a list of items which in his opinion are to be completed or corrected and shall request in writing that the Design Consultant and the Construction Program Manager perform a Substantial Completion inspection. The Design Consultant and the Construction Program Manager shall review the Contractor's list and shall compile an inspection report of items to be corrected and completed. The failure to include any items on such list does not alter the responsibility of the Contractor to complete all Work in accordance with the Contract Documents. When the Design Consultant on the basis of an inspection determines that the Work is substantially completed then, the Design Consultant will prepare a Certificate of Substantial Completion which shall establish the Date of Substantial Completion, shall state the responsibilities of the Owner and the Contractor for security, maintenance, heat, utilities, damage to the Work, and insurance, and shall fix the time within which the Contractor shall complete the items listed therein. Warranties required by the Contract Documents shall commence on the Date of Final Completion of the Work. The Certificate of Substantial Completion shall be submitted to the Owner and the Contractor for their written acceptance of the responsibilities assigned to them in such Certificate.

9.8.2 Upon Substantial Completion of the Work and upon application by the Contractor and certification by the Construction Program Manager and the Design Consultant, the Owner may make payment, reflecting adjustment in retainage, if any, for such work or portion thereof, as provided in the Contract Documents.

9.8.3 The acceptance of any Substantial Completion payment shall constitute a waiver and full release of all claims by the Contractor except those previously made in writing and identified by the Contractor as unsettled at the time of the Application for Payment for Substantial Completion, and except for the retainage sums due at final completion and acceptance.

9.8.4 The Contractor shall have thirty (30) working days from the Date of Substantial Completion to complete all items on the inspection report to the satisfaction of the Owner, Design Consultant and Construction Program Manager. The Owner and the Construction Program Manager shall have the option to correct or conclude any and all items on the inspection report not completed by the Contractor within thirty (30) working days from the Date of Substantial Completion by utilizing its own forces or by hiring others. The cost of such correction of remaining inspection report items by the Owner or others shall be deducted from the final payment to the Contractor.

9.8.5 The issuance of the Certificate of Substantial Completion does not indicate final acceptance of the Project by the Owner, and the Contractor is not relieved of any

responsibility for the Project except as specifically stated in the Certificate of Substantial Completion.

9.8.6 Should the Design Consultant and the Construction Program Manager determine that the work or a designated portion thereof is not substantially complete, they shall provide the Contractor with written notice stating why the Project or designated portion is not substantially complete. The Contractor shall expeditiously complete the Work and shall re-request in writing that the Design Consultant and the Construction Program Manager perform a Substantial Completion inspection. Costs, if any, associated with such additional inspection(s) shall be assessed to and paid by the Contractor.

9.9 FINAL COMPLETION AND FINAL PAYMENT

9.9.1 Upon receipt of the documentation required by Article 9.8, and of written notice that the Work is ready for final inspection and acceptance and upon receipt of a final Application for Payment, the Design Consultant and the Construction Program Manager will promptly make such inspection and, when they find the Work acceptable under the Contract Documents and the Contract fully performed, they will jointly issue a final Certificate of Payment stating that to the best of their knowledge, information and belief, and on the basis of their observations and inspections, the Work has been completed in accordance with the terms and conditions of the Contract Documents and that the entire balance found to be due the Contractor, and noted in said final Certificate, is due and payable. The final Certificate for Payment will constitute a further representation that the conditions precedent to the Contractor's being entitled to final payment as set forth in Subparagraph 9.8 have been fulfilled. Payment shall be made in full to the Contractor within thirty (30) calendar days of the date of the final Certificate of Payment provided that the requirements of Article 9 have been fulfilled, except for an amount mutually agreed upon for any work remaining uncompleted for which the Owner is entitled a credit under the Contract Documents. Owner shall have no obligation to pay any Applications for Progress or Final Payments absent an approved Certificate of Payment from the Design Consultant and the Construction Program Manager.

9.9.2 Neither the final payment nor the remaining retained percentage shall become due until the Work is free and clear of any and all liens and as additional conditions precedent to the requirement to make final payment, the Contractor shall submit to the Owner:

.1 an affidavit from Contractor and all Subcontractors, sub-Subcontractors and materialmen that all payrolls, bills for materials and equipment, and other indebtedness connected with the Work have been paid or otherwise satisfied;
.2 consent of surety, if any, to final payment;
.3 if required by the Construction Program Manager, other data establishing payment or satisfaction of all such obligations, such as receipts, releases and waivers of liens arising out of the Contract, to the extent and in such form as may be designated by the Construction Program Manager;

.4 all as-built drawings, operation manuals and project close training and documentation in the form required by the Contract Documents after having been delivered to and approved by the Design Consultant; and

.5 a written certification that:

(1.) the Contractor has reviewed the requirements of the Contract Documents,

(2.) the Work has been inspected by the Contractor for compliance with all requirements of the Contract Documents,

(3.) pursuant to this inspection, the Contractor certifies and represents that the Work complies in all respects with the requirements of the Contract Documents,

(4.) the Contractor further certifies and represents that all equipment and systems have been installed in accordance with the Contract Documents and have been tested in accordance with specification requirements and are operational, and

(5.) the Contractor hereby certifies and represents that the Work is complete and properly installed in all respects and ready for final inspection.

9.9.3 If any Subcontractor refuses to furnish a release or waiver required by the Owner, the Contractor may furnish a bond satisfactory to the Owner to indemnify him against any loss. If any such lien or claim remains unsatisfied after all payments are made, the Contractor shall refund to the Owner all moneys that the latter may be compelled to pay in discharging such lien or claim, including all costs and reasonable attorneys' fees. The Owner may withhold from the final payment any sum that the Owner has reason to believe may be needed to satisfy any claim arising from the Work. The Owner may deduct from the final payment an amount equal to any costs, expenses and attorneys' fees incurred by the Owner associated with any lien or claim by a Subcontractor, sub-subcontractor, material supplier, laborer, etc.

9.9.4 The making of final payment shall not constitute a waiver of any claims by the Owner against the Contractor.

9.9.5 The acceptance of final payment shall constitute a waiver and release of all claims by the Contractor.

9.10 OWNER'S RIGHT TO OCCUPY INCOMPLETE WORK

9.10.1 Should the Project, or any portion thereof, be incomplete for Beneficial Occupancy or Final Completion at or on the scheduled date or dates, the Owner shall have the right to occupy any remaining portion of the Project. In such an event, the Contractor shall not be entitled to any extra compensation on account of said occupancy by the Owner or by the Owner's normal full use of that portion of the Project, nor shall the Contractor interfere in any way with said normal full use of that portion of the Project. Further, in such an event, the Contractor shall not be entitled to any extra compensation on account of the Owner's partial occupancy and use of the Project, nor shall the Contractor be relieved of any responsibilities of the Contract including the required times of completion, the payment of liquidated or other damages. Such occupancy by

the Owner does not constitute Beneficial Occupancy, Substantial Completion or Final Completion. Finally, in the event Owner partially occupies the Project, the Contractor should thereafter conduct its construction operations in a manner that does not interfere with the Owner's partial use of the Project as a school or otherwise. This may include work hours restricted to nights, holidays and weekends. Notwithstanding such work hour restrictions, Contractor shall nonetheless man the Project for prompt completion and shall pay all additional cost of construction, security, utility, energy and related costs incurred during its ongoing construction operations.

9.11 LIQUIDATED DAMAGES

9.11.1 Should the Contractor fail to substantially complete the Work on or before the date stipulated for Substantial Completion (or such later date as may result from extension of time granted by Owner), he shall pay the Owner, as liquidated damages, the sum of five hundred dollars ($500.00) for each consecutive calendar day that terms of the Contract relating to obtaining Substantial Completion remain unfulfilled beyond the date allowed by the Contract, which sum is agreed upon as a reasonable and proper measure of damages which the Owner will sustain per day by failure of the Contractor to complete work within time as stipulated; it being recognized by the Owner and the Contractor that the injury to the Owner which could result from a failure of the Contractor to complete on schedule is uncertain and cannot be computed exactly. In no way shall costs for liquidated damages be construed as a penalty on the Contractor.

9.11.2 For each consecutive calendar day that the Work remains incomplete after the date established for Final Completion, the Owner will retain from the compensation otherwise to be paid to the Contractor the sum of five hundred dollars ($500.00) per calendar day. This amount is the minimum measure of damages the Owner will sustain by failure of the Contractor to complete all remedial work, correct deficient work, clean up the Project and other miscellaneous tasks as required to complete all work specified. This amount is in addition to the liquidated damages prescribed above and shall be added to such damages for any period of time that the Contractor is late in achieving both Substantial and Final Completion. After Substantial Completion is achieved, Owner shall only be entitled to collect liquidated damages for Contractor's failure to meet the Final Completion.

END OF ARTICLE 9

ARTICLE 10

PROTECTION OF PERSONS AND PROPERTY

10.1 SAFETY PRECAUTIONS AND PROGRAMS

10.1.1 Neither the Owner, the Construction Program Manager, the Design Consultant, nor their agents, employees or representatives are responsible for the means, methods, techniques, sequences or procedures utilized by the Contractor, or for safety precautions and programs in connection with the Work. The Contractor shall be solely responsible for initiating, maintaining and supervising the means, methods, techniques, sequences, procedures and all safety precautions and programs in connection with the Work. This requirement applies continuously throughout the Contract performance, until Final Payment is made, and is not limited to regular working hours.

10.2 SAFETY OF PERSONS AND PROPERTY

10.2.1 The Contractor shall take all reasonable precautions for the safety of, and shall provide all reasonable protection to prevent damage, injury or loss to:

.1 all employees on the Work and all other persons who may be affected thereby;
.2 all the Work and all materials and equipment to be incorporated therein, whether in storage on or off the site, under the care, custody or control of the Contractor or any of his Subcontractors or Sub-Subcontractors, machinery, equipment and all hazards shall be guarded or eliminated in accordance with all applicable safety regulations; and
.3 other property at the site or adjacent thereto, including trees, shrubs, lawns, walks, pavements, roadways, structures and utilities not designated for removal, relocation or replacement in the course of construction.

10.2.2 The Contractor shall give all notices and comply with all applicable laws, ordinances, permits, rules, regulations and lawful orders of any public authority bearing on the safety or persons or property or their protection from damage, injury or loss. Contractors shall comply with the requirements of the Trench Safety Act, Chapter 553, Florida Statutes. Each specific subcontract within the scope of such act shall be in compliance with the Act and Contractor hereby acknowledges his Bid complies with and was prepared in accordance with the Act.

10.2.2.1 The Contractor shall at all times safely guard the Owner's property from injury or losses in connection with the Contract. He shall at all times safely guard and protect his own work and adjacent property as provided by law and the Contract Documents, from damage. All passageways, guard fences, lights and other facilities required for protection by applicable safety regulations must be provided and maintained by the Contractor.

10.2.3 The Contractor shall erect and maintain, as required by existing conditions and progress of the Work, all reasonable safeguards for safety and protection, including posting danger signs and other warnings against hazards, promulgating safety regulations and notifying Owners and users of adjacent utilities.

10.2.4 When the use or storage of explosives or other hazardous materials or equipment is necessary for the execution of the Work, the Contractor shall exercise the utmost care and shall carry on such activities under the supervision of properly qualified personnel.

10.2.5 The Contractor shall promptly remedy at his own cost and expense all damage or loss to any property referred to in Clauses 10.2.1.2 and 10.2.1.3 caused in whole or in part by the Contractor, any Subcontractor, any Sub-Subcontractor, or anyone directly or indirectly employed by any of them, or by anyone for whose acts any of them may be liable and for which the Contractor is responsible under Clauses 10.2.1.2 and 10.2.1.3. The foregoing obligations of the Contractor are in addition to his obligations under Paragraph 4.21. The Contractor shall perform such restoration by underpinning, repairing, rebuilding, replanting, or otherwise restoring as may be required or directed by the Construction Program Manager or Owner, or shall make good such damage in a satisfactory and acceptable manner. In case of failure on the part of the Contractor to promptly restore such property or make good such damage, the Construction Program Manager or Owner may, upon two (2) calendar days written notice, proceed to repair, rebuild or otherwise restore such property as may be necessary and the cost thereof, or a sum sufficient in the judgment of the Construction Program Manager or Owner to reimburse the Owners of property so damaged, will be deducted from any monies due or to become due the Contractor under the Contract.

10.2.6 The Contractor is responsible for the proper packing, shipping, handling and storage (including but not limited to shipment or storage at the proper temperature and humidity) of materials to be incorporated in the Work, so as to insure the preservation of the quality and fitness of the material for proper installation and incorporation in the Work, as required by the Contract Documents. For example, but not by way of limitation, Contractor shall, when necessary, place material on wooden platforms or other hard and clean surfaces and not on the ground and/or place such material under cover in any appropriate shelter or facility. Stored materials or equipment shall be located so as to facilitate proper inspection. Material and equipment which is delivered crated shall remain crated until ready for installation. Lawns, grass plots or other private property shall not be used for storage purposes without the written permission of the Owner or lessee unless otherwise within the terms of the easements obtained by the Owner.

10.2.6.1 It shall be the responsibility of the Contractor in his preparation of phasing schedule of work operations after consulting with the other Separate Prime Contractors to designate areas in which each Contractor may store materials. Areas designed shall meet with the approval of the Design Consultant.

10.2.7 The Contractor shall give notice in writing at least 48 hours before breaking ground, to all persons, Public Utility Companies, Owners of property having structures or improvements in proximity to site of the Work, superintendents, inspectors, or those otherwise in charge of property, streets, water pipes, gas pipes, sewer pipes, telephone cables, electric cables, railroads or otherwise, who may be affected by the Contractor's operation, in order that they may remove any obstruction for which they are responsible and have representative on site to see that their property is properly protected. Such notice does not relieve the Contractor of responsibility for all damages, claims, or defense or indemnification of all actions against Owner resulting from performance of such work in connection with or arising out of Contract.

10.2.8 Contractor shall field locate all utilities and acknowledges that all utilities are not necessarily shown in the Contract Documents, or may be incorrectly located thereon. The Contractor shall protect all utilities encountered while performing its Work, whether indicated on the Contract Drawings or not. The Contractor shall maintain utilities in service until moved or abandoned. The Contractor shall exercise due care when excavating around utilities and shall restore any damaged utilities to the same condition or better as existed prior to starting the Work, at no cost to the Owner. The Contractor shall maintain operating utilities or other services, even if they are shown to be abandoned on the Contract Drawings, in service until new facilities are provided, tested and ready for use.

10.2.9 The Contractor shall return all improvements on or about the site and adjacent property which are not shown to be altered, removed or otherwise changed to conditions which existed prior to starting work.

10.2.10 The Contractor shall protect the Work, including but not limited to, the site, stored materials and equipment, excavations, and excavated or stockpiled soil or other material, intended for use in the Work, and shall take all necessary precautions to prevent or minimize damage to same or detrimental effect upon his performance or that of his Subcontractors, caused by or due to rain, snow, ice, run-off, floods, temperature, wind, dust, sand and flying debris; for example, but not by way of limitation, Contractor shall, when necessary, utilize temporary dikes, channels or pumping to carry-off divert or drain water, and shall as necessary tie-down or otherwise secure the Work and employ appropriate covers and screens.

10.2.11 The Contractor shall designate a responsible member of his organization at the site whose duty shall be the prevention of accidents and the protection of material, equipment and property. This person shall be the Contractor's superintendent unless otherwise designated by the Contractor in writing to the Owner.

10.2.12 The Contractor shall not load or permit any part of the Work to be loaded so as to endanger its safety.

10.2.13 Notification to the Contractor by the Owner, the Construction Program Manager or the Design Consultant of a safety violation will in no way relieve the Contractor of sole and complete responsibility for the correction of said violation, the safety at the Project site, or of sole liability for the consequences of said violation.

10.3 EMERGENCIES

10.3.1 In any emergency affecting the safety of persons or property, the Contractor shall act, at his discretion, to prevent threatened damage, injury or loss. The Contractor shall notify the Owner and the Construction Program Manager of the situation and all actions taken immediately thereafter. If, in the opinion of the Contractor, immediate action is not required, the Contractor shall notify the Owner and Construction Program Manager of the emergency situation and proceed in accordance with the Owner's or Construction Program Manager's instructions. Provided, however, if any loss, damage, injury or death occurs that could have been prevented by the Contractor's prompt and immediate action, the Contractor shall be fully liable for all costs, damages, claims, actions, suits, attorney's fees and all other expenses arising therefrom or relating thereto. Any additional compensation or extension of time claimed by the Contractor on account of emergency work shall be determined as provided in Article 12 for Changes in the Work.

END OF ARTICLE 10

ARTICLE 11

INSURANCE

11.1 CONTRACTOR'S LIABILITY INSURANCE

11.1.1 The Contractor shall purchase and maintain in companies properly licensed and qualified to do business in the State of Florida and acceptable to the Owner such non-surplus lines of insurance as will protect him, the Owner, the Construction Program Manager, the Design Consultant and their agents, representatives, and employees from claims set forth below which may arise out of or result from the Contractor's operations under the Contract, whether such operations be by himself or by any Subcontractor or by anyone directly or indirectly employed by any of them, or by anyone for whose acts any of them may be liable:

.1 claims under worker's or workmen's compensation, disability benefit and other similar employee benefit acts (with Workmen's Compensation and Employer's Liability Insurance in amounts not less than those necessary to meet the statutory requirements of the state having jurisdiction over the Work);
.2 claims for damages because of bodily injury, sickness or disease, or death of his employees; the Contractor will require his Subcontractors to similarly provide Workmen's Compensation Insurance for all of the latter's employees;
.3 claims for damages because of bodily injury, sickness or disease, or death of any person other than his employees;
.4 claims for damages insured by usual personal injury liability coverage which are sustained (1) by any person as a result of an offense directly or indirectly related to the employment of such person by the Contractor, or (2) by any other person;
.5 claims for damages, other than to the Work itself, because of injury to or destruction of tangible property, including loss of use resulting therefrom; and
.6 claims for damages because of bodily injury or death of any person or property damage arising out of the Ownership, maintenance or use of any motor vehicle.

11.1.2 The insurance required by Subparagraph 11.1.1 shall be primary and noncontributing to any insurance possessed or procured by the Owner, and limits of liability shall be not less than those set forth in the Supplementary Conditions of this Contract or required by law, whichever is greater.

11.1.3 The insurance required by Subparagraph 11.1.1 shall include Contractual liability insurance applicable to the Contractor's obligations under Paragraph 4.21.

11.1.4 Without limiting the above during the term of the Contract, the Contractor shall, at his own expense, purchase and maintain the following insurance with companies licensed to do business in the jurisdiction in which the Project is located and satisfactory to the Owner:

.1 Workmen's Compensation including Occupational Disease and Employer's Insurance.

a. Statutory - Amounts and coverage as required by **State of Florida** Workers' Compensation Laws;
b. Employers Liability: At least five hundred dollars ($500.00) for each accident;

.2 Public Contractor's Liability and Property Damage Insurance - The Contractor shall take out and maintain during the life of this Contract such Public Contractor's Liability and Property Damage Insurance as shall protect him and any Subcontractor performing work under this Contract from claims for damages for personal injury including accidental death, as well as from claims for personal property damage which may arise from operations under this Contract, whether such operations be by himself or by any Subcontractor or by anyone directly or indirectly employed by either of them. The Contractor shall procure insurance coverage for direct operations, sublet work, elevators, Contractual liability and completed operations with limits not less than those stated below:

a. Bodily Injury Liability:	$500,000 Per Person $1,000,000 Per Occurrence
b. Property Damage Liability:	$500,000 Per Person $1,000,000 Per Occurrence $2,000,000 Aggregate
c. Personal Injury:	$500,000 Per Person $2,000,000 Aggregate

.3 Property Damages, including Broad Form Property Damage and Explosion, Collapse, Underground property damage coverages, and blasting; in the amounts noted in paragraph 11.1.4.2;

.4 Completed Operations and Product Liability: Continuous coverage in force for one year after completion of work in the amounts noted in paragraph 11.1.4.2;

.5 Comprehensive Automobile Liability Insurance, including coverage for owned, non-owned and hired vehicles - with limits not less than those stated below:

a. Bodily Injury Liability:	$500,000 Each Person $1,000,000 Each Occurrence;
b. Property Damage Liability:	$1,000,000 Each Occurrence;

c. Excess/umbrella policy raising the above limits to $1,000,000; and

.6 The Contractor shall purchase and maintain during the life of this Contract complete Owner's Protective Liability Insurance in amounts as specified below. Insurance shall be taken out in the name of the Owner.

a. Bodily Injury:	$1,000,000 Each Occurrence $2,000,000 Aggregate
b. Property Damage:	$1,000,000 Each Occurrence $2,000,000 Aggregate Limit
c. Personal Injury:	$1,000,000 Each Occurrence $2,000,000 General Aggregate

.7 Liability insurance may be arranged by Comprehensive General Liability and Comprehensive Automobile Liability policies for the full limits required; Comprehensive General Liability Insurance may be arranged under a single policy for the full limits required or by a combination of underlying policies with the balance provided by an excess of umbrella liability policy.

11.1.5 The insurance required by Subparagraph 11.1 shall be written for not less than any limits of liability specified in the Contract Documents, or required by law, whichever is greater.

11.1.6 All certificates of Insurance acceptable to the Owner shall be filed with the Owner prior to commencement of the Work. These Certificates shall contain a provision that coverages afforded under the policies will not be canceled until at least thirty (30) days' prior written notice has been given to the Owner. The Contractor shall not commence work under this Contract until he has obtained all the insurance required hereunder and such insurance has been approved by the Owner, nor shall the Contractor allow any Subcontractor to commence work on his subcontract until all similar insurance required of the Subcontractor has been so obtained and approved. Approval of the insurance by the Owner shall not relieve or decrease the liability of the Contractor hereunder.

11.1.7 Regarding Property Damage
Include Broad Form Property Damage Endorsement wherein any exclusions relating to loss or damage due to explosion, collapse, or underground property damage have been removed.

11.2 PROPERTY INSURANCE

11.2.1 The Contractor shall purchase Commercial General Liability or other insurance and at all times maintain such insurance as will protect the Contractor, the Owner, the Construction Program Manager, the Owner's representatives, agents and employees, the Design Consultant, Subcontractors and Sub-Subcontractors from loss or damage to Work or property in the course of construction, including all machinery, materials

and supplies on the premises or in transit thereto and intended to become a part of the finished work until acceptance by the Owner. This insurance shall be in the form of "Builders All- Risk", "All-Risk Installation Floater", or equivalent. The Contractor shall cause such policy or policies of insurance required under this Subparagraph to be endorsed so as to provide that the insurer or insurers waive any right of subrogation against the Owner. Any deductible provision in such insurance shall not exceed the amount set forth in the Supplementary Conditions of the Contract. Notwithstanding any such deductible provision, the Contractor shall remain solely liable for the full amount of any item covered by such insurance.

11.2.2 Any loss insured under Subparagraph 11.2.1 is to be adjusted with the Owner and made payable to the Owner as trustee for the insureds, as their interests may appear, subject to the requirements of any applicable mortgagee clause and of Subparagraph 11.2.5. The Contractor shall pay each Subcontractor a just share of any insurance moneys received by the Contractor, and by appropriate agreement, written where legally required for validity, shall require each Subcontractor to make payments to his Sub-Subcontractors in similar manner.

11.2.3 The Owner and Contractor waive all rights against each other for damages caused by fire or other perils to the extent covered and paid by property insurance obtained pursuant to this Paragraph 11.2, or any other property insurance applicable to the Work, except such rights as they may have to the proceeds of such insurance held by the Owner as trustee. The Contractor shall require, by appropriate agreement, written where legally required for validity, similar waivers in favor of the Owner and the Contractor by Subcontractors and Sub-Subcontractors. With respect to the waiver of rights of recovery, the term Owner shall be deemed to include, to the extent covered by property insurance applicable thereto, his consultants, employees, and agents and representatives including the Design Consultant and Construction Program Manager and the Construction Program Manager's consultants, employees and agents and the Design Consultant and his consultants, employees and agents. The Contractor waives as against any Separate Prime Contractor described in Article 6 all rights for damages caused by fire or other perils in the same manner as is provided above as against the Owner. The Owner shall require, by appropriate agreement, written where legally required for validity, similar waivers in favor of the Contractor by any separate Contractor and his Subcontractors and sub-subcontractors.

11.2.4 If required in writing by any party in interest, the Owner as trustee shall, upon the occurrence of an insured loss, give bond for the proper performance of his duties. He shall deposit in a separate account any money so received, and he shall distribute it in accordance with such agreement as the parties in interest may reach, or in accordance with a court order or award. If after such loss no other special agreement is made, replacement of damaged work shall be covered by an appropriate Change Order.

11.2.5 The Owner as trustee shall have power to adjust and settle any loss with the insurers unless one of the parties in interest shall object in writing within five (5) days after the

occurrence of loss to the Owner's exercise of this power, and if such objection is made, the matter shall be decided by a court of competent jurisdiction or as the parties in interest otherwise mutually agree. The Owner as trustee shall, in that case, make settlement with the insurers in accordance with the orders of the court or as otherwise mutually agreed by the parties in interest.

11.2.6 If the Owner finds it necessary to occupy or use a portion or portions of the Work prior to Substantial Completion of the entire Project such occupancy or use shall not commence prior to a time mutually agreed to by the Owner and Contractor and to which the insurance company or companies providing the property insurance have consented by endorsement to the policy or policies. This insurance shall not be canceled or lapsed on account of such partial occupancy or use. Consent of the Contractor and of the insurance company or companies to such occupancy or use shall not be unreasonably withheld.

11.3 EFFECT OF SUBMISSION OF CERTIFICATES

11.3.1 The Owner and Construction Program Manager shall be under no obligation to review any Certificates of Insurance provided by the Contractor or to check or verify the Contractor's compliance with any and all requirements regarding insurance imposed by the Contract Documents. The Contractor is fully liable for the amounts and types of insurance required herein and is not excused should any policy or certificate of insurance provided by the Contractor not comply with any and all requirements regarding insurance imposed by the Contract Documents.

11.4 FAILURE OF COMPLIANCE

11.4.1 Should the Contractor fail to provide and maintain in force any and all insurance, or insurance coverage required by the Contract Documents or by law, or should a dispute arise between Owner and any insurance company of Contractor over policy coverage or limits of liability as required herein, the Owner shall be entitled to recover from the Contractor and its Surety all amounts payable, as a matter of law, to Owner or any other parties, including but not limited to the Construction Program Manager and the Design Consultant, had the required insurance or insurance coverage been in force. Said recovery shall include, but is not limited to interest for the loss of use of such amounts of money, plus all attorney's fees, costs and expenses incurred in securing such determination and any other consequential damages arising out of the failure of the Contractor or insurance company to comply with the provisions of the Contract Documents, or any policy required hereby, or any other requirements regarding insurance imposed by law. Nothing herein shall limit any damages for which Contractor is responsible as a matter of law.

11.5 OWNER'S INSURANCE

11.5.1 The Owner, at his option, may purchase and maintain such insurance as will insure him against loss of use of his property due to fire or other hazards, however caused.

11.6 LICENSED INSURANCE COMPANIES

11.6.1 All insurance companies providing the above insurance shall be licensed by the **Department Insurance & Treasurer of the State of Florida** and shall be general lines of insurance. No surplus lines of insurance are permitted.

END OF ARTICLE 11

ARTICLE 12

CHANGES IN THE WORK

12.1 CHANGE ORDERS

12.1.1 The Owner may, at any time, by written order designated or indicated to be a Change Order, make any change or modification in the Work or add to the Work within the general scope of the Contract, including, but not limited to changes:

.1 in the Specifications or Drawings;
.2 in the sequence, method or manner of performance of the Work;
.3 in the Owner-furnished facilities, equipment, materials, services or site; or
.4 directing acceleration in the performance of the Work.

12.2 OWNER DIRECTED CHANGES REQUIRING AN INCREASE IN CONTRACT SUM. No change in the Contract Sum or Time may be made except by a duly authorized and executed written Change Order. If the Change in or addition to the Work will result in an increase in the Contract Sum, the Owner shall have the right to require the performance thereof on a lump sum basis, a unit price basis or a time and material basis, all as hereinafter more particularly described (the right of the Owner as aforesaid shall apply with respect to each such Change in the Work).

12.2.1 If the Owner elects to have the Change in the Work performed on a lump sum basis, its election shall be based on a lump sum proposal which shall be submitted by the Contractor to the Construction Program Manager within ten (10) days of the Contractor's receipt of a request therefor (but the Owner's request for a lump sum proposal shall not be deemed an election by the Owner to have the Change in the Work performed on a lump sum basis). The Contractor's proposal shall be itemized and segregated by labor and materials for the various components of the Change in or addition to the Work (no aggregate labor total will be acceptable) and shall be accompanied by signed proposals of any Subcontractors who will perform any portion of the Change in, or addition to, the Work and of any persons who will furnish materials or equipment for incorporation therein. The proposal shall also include the Contractor's estimate of the time required to perform said changes or additional work.

The portion of the proposal relating to labor, whether by the Contractor's forces or the forces of any of its Subcontractors, may include reasonably anticipated gross wages of Job Site labor, including foremen, who will be directly involved in the Change in the Work (for such time as they will be so involved), plus payroll costs (including premium costs of overtime time, if overtime is anticipated, Social Security, Federal or State unemployment insurance taxes and fringe benefits required by collective bargaining agreements entered into by the Contractor or any such Subcontractor in connection with such labor) and up to ten percent (10%) of such anticipated gross wages, but not

payroll costs, as overhead and profit for the Contractor or any such Subcontractor, as applicable (said overhead and profit to include all supervision except foremen).

The portion of the proposal relating to materials may include the reasonably anticipated direct costs to the Contractor or to any of its Subcontractors of materials to be purchased for incorporation in the Change in the Work, plus transportation and applicable sales and use taxes and up to ten percent (10%) of said direct material costs as overhead and profit for the Contractor or any such Subcontractor (said overhead and profit to include all small tools), and may further include the Contractor's and any of its Subcontractor's reasonably anticipated rental costs in connection with the Change in the Work (either actual or discounted local published rates), plus up to six percent (6%) thereof as overhead and profit for the Contractor or any such Subcontractors, as applicable. If any of the items included in the lump sum proposal are covered by unit prices contained in the Contract Documents, the Owner may, if it requires the Change in the Work to be performed on a lump sum basis, elect to use these unit prices in lieu of the similar items included in the lump sum proposal, in which event an appropriate deduction will be made in the lump sum amount prior to the application of any allowed overhead and profit percentages. No overhead and profit shall be applied to any unit prices.

The lump sum proposal may include up to six percent (6%) of the amount which the Contractor will pay to any of its Subcontractors for the Change in the Work as a commission to the Contractor.

12.2.2 In the event the Contractor fails to submit his proposal within the designated period, the Owner may order the Contractor to proceed with the Change or Addition to the Work and the Contractor shall so proceed. The Construction Program Manager shall unilaterally determine the reasonable cost and time to perform the Work in question, which determination shall be final and binding upon the Contractor.

12.2.3 If the Owner elects to have the Change in the Work performed on a time and material basis, the same shall be performed, whether by the Contractor's forces or the forces of any of its Subcontractors or Sub-Subcontractors, at actual cost to the entity performing the Change in the Work (without any charge for administration, clerical expense, supervision or superintendence of any nature whatsoever, including foremen, or the cost, use or rental of tools or plant), plus ten percent (10%) thereof as the total overhead and profit (except that said ten percent (10%) shall not be applied against any payroll costs, as set forth in Subparagraph 12.2.1.). The Contractor shall submit to the Owner daily time and material tickets, to include the identification number assigned to the Change in the Work, the location and description of the Change in the Work, the classification of labor employed (and names and social security numbers), the materials used, the equipment rented (not tools) and such other evidence of cost as the Owner may require. The Owner may require authentication of all time and material tickets and invoices by persons designated by the Owner for such purpose. The failure of the Contractor to secure any required authentication shall, if the Owner elects to treat it as such, constitute a waiver by the Contractor of any claim for the cost of that

portion of the Change in the Work covered by a non-authenticated ticket or invoice; provided, however, that the authentication of any such ticket or invoice by the Owner shall not constitute an acknowledgement by the Owner that the items thereon were reasonably required for the Change in the Work.

12.2.4 No overhead and profit will be paid by the Owner on account of a Change in the Work except as specifically provided in this Paragraph 12.2. Overhead and profit, as allowed under this Paragraph 12.2, shall be deemed to include all costs and expenses which the Contractor or any of its Subcontractors may incur in the performance of a Change in the Work and which are not otherwise specifically recoverable by them pursuant to this Paragraph 12.2, including both its General Conditions at the Project site and its related home office overhead, if any.

12.3 CONTRACTOR NOTICE OF CHANGE

12.3.1 If the Contractor asserts that any event or occurrence has caused a change in or addition to the Work which change causes an increase or decrease in the Contractor's cost or the time required for the performance of any part of the Work under the Contract, including Work not affected directly by the change, the Contractor shall, within ten (10) days of such event, give the Owner written notice as herein required. Said notice shall include the instructions or circumstances that are the basis of the claim and the Contractor's best estimate of the cost and time involved.

12.3.2 If the Contractor intends to assert a claim under this Article, he must, within ten (10) days after receipt of a written Change Order under Subparagraph 12.2 above or the furnishing of a written notice under Subparagraph 12.3.1, submit to the Construction Program Manager a written statement setting forth the specific nature and cost of such claim, unless this period is extended by the Construction Program Manager. The statement of claim hereunder may be included in the notice under Subparagraph 12.3.1 above. The statement of claim shall include all direct, indirect and impact costs associated with the change, whether incurred at the jobsite or home office, as well as the Contractor's estimate of the schedule impact of the change, if any.

12.3.3 If the parties are unable to agree to the reasonable cost and time to perform the Change, or are unable to agree as to whether a change occurred, the Construction Program Manager shall make a unilateral determination as described in Article 12.2.2. The Contractor shall proceed pursuant to the provisions of that Article.

12.4 GENERAL PROVISIONS RELATED TO CHANGES

12.4.1 The Contractor shall not be entitled to any amount for indirect costs, damages or expenses of any nature, including, but not limited to, so-called "impact" costs, home office overhead, general conditions, labor inefficiency, wage, material or other escalations beyond the prices upon which the proposal is based and to which the parties have expressly agreed, in writing. pursuant to the provisions of Article 12, and which the Contractor, its Subcontractors or Sub-Subcontractors or any other person

may incur as a result of delays, interferences, suspensions, accelerations, changes in sequence or the like, for whatever cause, whether reasonable or unreasonable, foreseeable or unforeseeable, or avoidable or unavoidable, arising from the performance of any and all changes in the Work performed pursuant to this Article 12. It is understood and agreed that the Contractor's sole and exclusive remedy in such event shall be recovery of his direct costs as compensable hereunder and an extension of the Contract Time, but only in accordance with the provisions of the Contract Documents.

12.4.2 CHANGES REQUIRING A DECREASE IN CONTRACT SUM. If the Change in the Work will result in a decrease in the Contract Sum, the Owner may request a quotation by the Contractor of the amount of such decrease for use in preparing a Change Order. The Contractor's quotation shall be forwarded to the Owner within five (5) days of the Owner's request and, if acceptable to the Owner, shall be incorporated in the Change Order. If not acceptable, the parties shall make every reasonable effort to agree as to the amount of such decrease, which may be based on a lump sum properly itemized, on unit prices stated in the Contract Documents and/or on such other basis as the parties may mutually determine. If the parties are unable to so agree, the amount of such decrease shall be the total of the estimated reduction in actual cost of the Work, as determined by the Construction Program Manager in its reasonable judgment, plus ten percent (10%) thereof as overhead and profit.

12.4.3 No claim by the Contractor hereunder shall be allowed if asserted after final payment under this Contract. No claim for additional compensation of Contract Time relating to or flowing from a particular change shall be allowed after execution of the Change Order relating to that change.

12.5 ADMINISTRATIVE CHANGES IN THE WORK

12.5.1 The Design Consultant shall have authority to order minor administrative changes in the Work not involving an adjustment in the Contract Sum or an extension of the Contract Time and not inconsistent with the intent of the Contract Documents. Such changes shall be effected by written field order, and shall be binding on the Owner and the Contractor. The Contractor shall carry out such written field orders promptly.

12.6 DIFFERING SITE CONDITIONS

12.6.1 Should the Contractor encounter subsurface and/or latent conditions at the site materially differing from those shown in the Contract Documents or differing materially from those ordinarily encountered and generally recognized as inherent in work of the character provided for in this Contract, he shall immediately give notice to the Construction Program Manager of such conditions before they are disturbed. The Construction Program Manager and the Design Consultant shall thereupon promptly investigate the conditions and if they find that the conditions materially differ from those shown in the Contract Documents, the Design Consultant shall prepare and process a Change Order. Any increase or decrease of cost resulting from such changes shall be

adjusted in the manner provided herein for adjustments as to extra and/or additional work and changes. However, neither the Owner, Construction Program Manager nor the Design Consultant shall be liable or responsible for additional work, costs or changes to the work due to material differences between actual conditions and any geotechnical, soils and other reports, surveys and analyses made available for the Contractor's review, or as a result of known conditions at unknown quantities or locations at the site, except as required by any applicable unit prices.

END OF ARTICLE 12

ARTICLE 13

UNCOVERING AND CORRECTION OF WORK

13.1 UNCOVERING OF WORK

13.1.1 If any portion of the Work should be covered contrary to the request of the Owner or the Design Consultant or to requirements specifically expressed in the Contract Documents or to requirements of applicable Construction Permits, it must, if required in writing by the Owner, be uncovered for his observation and shall be replaced at the Contractor's expense.

13.1.2 If any other portion of the Work has been covered which the Design Consultant or the Owner has not specifically requested to observe prior to being covered, either may request to see such Work and it shall be uncovered by the Contractor. If such work be found in accordance with the Contract Documents, the cost of uncovering and replacement shall, by appropriate Change Order, be charged to the Owner. If such Work be found not in accordance with the Contract Documents, the Contractor shall pay such costs unless it be found that this condition was caused by the Owner, in which event the Owner shall be responsible for the payment of such costs. If such condition was caused by a separate Contractor, Contractor may proceed against and only against, said separate Contractor as provided in Article 6.

13.2 CORRECTION OF WORK

13.2.1 The Contractor shall promptly reconstruct, replace or correct all Work rejected by the Design Consultant as defective or as failing to conform to the Contract Documents or as not in accordance with the guarantees and warranties specified in the Contract Documents whether observed before or after Substantial or Final Completion and whether or not fabricated, installed or completed. The Contractor shall bear all costs of correcting such rejected Work, including compensation for the Design Consultant's and the Construction Program Manager's additional services made necessary thereby.

13.2.2 The Contractor, unless removal is waived by the Owner, shall remove from the site all portions of the Work which are defective or non-conforming, or if permitted or required, he shall correct such work in place at his own expense promptly after receipt of notice, and such rejected Work shall not thereafter be tendered for acceptance unless the former rejection or requirement for correction is disclosed.

13.2.3.1.1 If the Contractor does not proceed with the correction of such defective or non-conforming Work within a reasonable time fixed by written notice from the Owner, the Owner may either (1) by separate Contract or otherwise replace or correct such Work and charge the Contractor the cost occasioned the Owner thereby and remove and store the materials or equipment at the expense of the Contractor, or (2) terminate this Contract for default as provided in Paragraph 14.3. If the Contractor does not pay

the cost of such replacement or correction and the removal and storage within ten (10) days thereafter, the Owner may upon ten (10) additional days' written notice sell such Work at auction or at private sale and shall account for the net proceeds thereof, after deducting all the costs that should have been borne by the Contractor, including compensation for additional services of the Design Consultant, attorneys and the Construction Program Manager made necessary thereby. If such proceeds of sale do not cover all costs which the Contractor should have borne, the difference shall be charged to the Contractor and an appropriate Change Order shall be issued. If the payments then or thereafter due the Contractor are not sufficient to cover such amount, the Contractor shall pay the difference to the Owner.

13.2.4 The Contractor shall bear the cost of making good all work of the Owner or separate Contractors destroyed or damaged by such correction or removal.

13.2.5 Nothing contained in Article 13.2 shall be construed to establish a period of limitation with respect to any other obligation which the Contractor might have under the Contract Documents, including Paragraph 4.6 hereof. The establishment of the time period of one year after the Date of Final Completion or such longer period of time as may be prescribed by law or by the terms of any warranty required by the Contract Documents relates only to the specific obligation of the Contractor to correct the Work which became deficient within such period of time, and has no relationship to the time within which his obligation to comply with the Contract Documents may be sought to be enforced, nor to the time within which proceedings may be commenced to establish the Contractor's liability with respect to his obligations other than specifically to correct the Work.

13.2.4 ACCEPTANCE OF DEFECTIVE OR NON-CONFORMING WORK

13.3.1 If the Owner prefers to knowingly accept defective or non-conforming Work, he may do so instead of requiring its removal and correction, in which case a Change Order must be issued to reflect the Owner’s knowing acceptance of defective work and a reduction in the Contract sum where appropriate and equitable, or the Owner may elect to accept payment in materials or services, in lieu of a reduction in the Contract sum. If the amount of a reduction is determined after final payment, it shall be paid to the Owner by the Contractor. The only method for the Owner to accept defective or non-conforming Work shall be by a written change order signed by the **St. Johns County School Board**. Absent such a change order, no acceptance of defective or non-conforming Work is permitted.

END OF ARTICLE 13

ARTICLE 14

TERMINATION OF THE CONTRACT

14.1 TERMINATION BY THE CONTRACTOR

14.1.1 If the Work is stopped for a period of one hundred twenty (120) days under an order of any court or other public authority having jurisdiction, or as a result of an act of government, such as a declaration of a national emergency making materials unavailable, through no act or fault of the Contractor or a Subcontractor or their agents or employees or any other persons performing any of the Work under a Contract with the Contractor, then the Contractor may, upon seven (7) additional days' written notice to the Construction Program Manager and the Design Consultant, terminate the Contract and recover from the Owner the reasonable value of the labor and materials actually furnished for the portion of the Work completed. The Contractor shall not be entitled to collect and hereby expressly waives and releases any claim to any profit on work not performed and for any damages related to that portion of the Contract which was not completed.

14.2 TERMINATION FOR CONVENIENCE OF THE OWNER

14.2.1 The Owner may, at any time upon ten (10) days' written notice to the Contractor, which notice shall specify that portion of the Work to be terminated and the date said termination is to take effect, terminate (without prejudice to any right or remedy of the Owner) the whole or any portion of the work for the convenience of the Owner. The Contractor's sole remedy, in the event of such termination, will be the allowable termination costs permitted by Article 14.4. Contractor shall include termination clauses identical to Article 14 in each of his Subcontracts.

14.3 DEFAULT TERMINATION

14.3.1 The Owner may, upon ten (10) days' written notice to the Contractor and to the Contractor's surety, terminate (without prejudice to any right or remedy of the Owner or any subsequent buyer of any portion of the Work) the employment of the Contractor and his right to proceed either as to the whole or any portion of the Work required by the Contract Documents and may take possession of the Work and complete the Work by Contract or otherwise in any one of the following circumstances:

.1 if the Contractor refuses or fails to prosecute the work or any separable part thereof with such diligence as will ensure the Substantial or Final Completion of the Work within the Contract Time or fails to complete the Work within said periods;

.2 if the Contractor is in material default in carrying out any provisions of the Contract;

.3 if the Contractor fails to supply a sufficient number of properly qualified and skilled workmen or proper equipment or materials;

.4 if the Contractor fails to make prompt payment to Subcontractors or materialmen or for materials or labor;

.5 if the Contractor disregards laws, permits, ordinances, rules, the Lunsford Requirements, regulations or orders of any public authority having jurisdiction, or fails to follow the instructions of the Owner;

.6 if the Contractor violates any provisions of the Contract Documents; or

.7 if the Contractor refuses or fails to properly schedule, plan, coordinate and execute the Work, as specified herein, so as to perform the Work within the specified Milestone and Completion dates, or to provide scheduling or related information, revisions and updates as required by the Contract Documents.

14.3.2 The right of the Contractor to proceed shall not be so terminated under this Paragraph 14.3 because of any delays in the completion of the Work due to unforeseeable causes beyond the control and without the fault or negligence of the Contractor or his Subcontractors as specifically set forth in Paragraph 8.3 hereof.

14.3.3 If, after the Contractor has been terminated for default pursuant to Paragraph 14.3, it is determined that none of the circumstances set forth in Subparagraph 14.3.1 exist, then such termination shall be considered a termination for convenience pursuant to Paragraph 14.2. In such case, the Contractor's sole remedy will be recovery of its reasonably incurred costs as permitted by Article 14.4.

14.3.4 If the Owner terminates the employment of the Contractor, pursuant to Article 14.3, the Contractor shall not be entitled to receive any further payment until the Work is Finally Completed. If the then remaining unpaid balance of the Contract Sum exceeds the costs of completion of the Work, (including compensation for additional managerial, administrative, legal and inspection services and any damages for delay) such excess shall be paid to the Contractor.

14.3.5 If such completion costs and expenses shall exceed the remaining unpaid balance of the Contract Sum, the Contractor and his Surety shall be liable to the Owner for such excess. If the right of the Contractor to proceed with the Work is partially or fully terminated, the Owner may take possession of and utilize in completing the Work such materials, appliances, supplies, plant and equipment as may be on the site of the terminated portion of the Work and necessary for the completion of the Work. If the Owner does not fully terminate the right of the Contractor to proceed, the Contractor shall continue to perform the part of the work that is not terminated.

14.4 ALLOWABLE TERMINATION COSTS

14.4.1 If the Owner terminates the whole or any portion of the Work pursuant to Paragraph 14.2, then the Owner shall only be liable to the Contractor for those reasonable costs reimbursable to the Contractor in accordance with Subparagraph 14.4.2, provided however, that if there is evidence that the Contractor would have sustained a loss on the entire Contract had it been completed an appropriate adjustment shall be made reducing the amount of the allowable termination payment to reflect the indicated

amount of loss. Contractor shall submit any claim of reimbursable cost, as stated in this paragraph, within 10 days of receipt of Notice of Termination or such claims are waived, released and forever barred.

14.4.2 If the Owner terminates the whole or any portion of the Work pursuant to Paragraph 14.2, the Owner shall pay the Contractor the reasonable costs determined by the Construction Program Manager as follows:

.1 an amount for supplies, services, or property accepted by the Owner pursuant to Clause 14.5.1.6 or sold or acquired pursuant to Clause 14.5.1.7 and not heretofore paid for, and to the extent provided in the Contract such amount shall be equivalent to the aggregate price for such supplies or services computed in accordance with the price or prices specified in the Contract, appropriately adjusted for any saving of freight or other charges; and

.2 the total of:

(1) the reasonable cost incurred in the performance of the Work terminated, including initial costs and preparatory expense allocable thereto, but exclusive of any costs attributable to supplies or services paid or to be paid for under Clauses 14.4.2.1 or 14.4.2.2.(2);

(2) the reasonable cost of settling and paying claims arising out of the termination of Work under Subcontracts or orders, pursuant to Clause 14.5.1.5, which are properly chargeable to the terminated portion of the Work (exclusive of amounts paid or payable on account of completed items of equipment delivered or services furnished by Subcontractors or vendors prior to the effective date of the notice of termination), which amounts shall be included in the costs payable under (1) above; and

(3) the reasonable costs of settlement, including accounting, legal, clerical and other expenses reasonably necessary for the preparation of settlement claims and supporting data with respect to the terminated portion of the Work and for the termination and settlement of Subcontracts thereunder, together with reasonable storage, transportation and other costs incurred in connection with the protection or disposition of property allocable to the Contract.

.3 Provided, however, that neither the Owner, the Construction Program Manager nor the Design Consultant will be liable for payments to Subcontractors or Contractor's termination costs for same pursuant to Article 14.4.2.2 unless each subcontract contains termination provisions identical to those set forth in Article 14. The Owner, Construction Program Manager and the Design Consultant will not be liable to the Contractor or any of his Subcontractors for any costs associated with termination if the subcontract of the party involved does not include the proper termination clauses.

14.4.3 In arriving at any amount due the Contractor pursuant to Paragraph 14.4, there shall be deducted the following:

.1 all unliquidated advance or other payments on account theretofore made to the Contractor applicable to the terminated portion of the Contract;
.2 any claim which the Owner may have against the Contractor;
.3 such amount as the Construction Program Manager determines to be necessary to protect the Owner against loss because of outstanding or potential liens or claims; and
.4 the agreed price for, or the proceeds of sale of, any materials, supplies or other things acquired by the Contractor or sold, pursuant to the provisions of Clause 14.5.1.7, and not otherwise recovered by or credited to the Owner.

14.4.4 The total sum to be paid to the Contractor under Paragraph 14.4 shall not exceed the Contract Sum as reduced by the amount of payments otherwise made or to be made for Work not terminated and as otherwise permitted by the Contract. Except for normal spoilage, and except to the extent that the Owner shall have otherwise expressly assumed the risk of loss, there shall be excluded from the amounts payable to the Contractor, as provided in Subparagraph 14.4.2, the fair value, as determined by the Construction Program Manager, of property which is destroyed, lost, stolen or damaged so as to become undeliverable to the Owner, or to a buyer pursuant to Clause 14.5.1.7.

14.4.5 If the Owner terminates the whole or any part of the Work pursuant to Paragraph 14.3, the Owner may procure, upon such terms and in such manner as the Construction Program Manager may deem appropriate, supplies or services similar to those so terminated, and the Contractor shall be liable to the Owner for any excess costs for such similar supplies or services. The Contractor shall continue the performance of the Contract to the extent not terminated hereunder.

14.5 GENERAL TERMINATION PROVISIONS

14.5.1 After receipt of a notice of termination from the Owner, pursuant to Paragraph 14.2 or 14.3, and except as otherwise directed by the Construction Program Manager, the Contractor shall:

.1 stop Work under the Contract on the date and to the extent specified in the notice of termination;
.2 place no further orders or subcontracts for materials, services or facilities, except as may be necessary for completion of such portion of the work under the Contract as is not terminated;
.3 except as assigned to Owner as set forth below, terminate all purchase orders and subcontracts to the extent that they relate to the performance of Work terminated by the notice of termination;
.4 at the option of the Owner and the Construction Program Manager, assign to the Owner in the manner, at the times and to the extent directed by the Construction

Program Manager, all of the rights in the subcontracts so terminated, in which case the Owner shall have the right, at his discretion, to settle or pay any or all claims arising out of the termination of such orders and subcontracts;

.5 settle all outstanding liabilities and all claims arising out of such termination or orders and subcontracts, with the approval or ratification of the Construction Program Manager, to the extent he may require, which approval or ratification shall be final for all the purposes of this Article;

.6 transfer title and deliver to the entity or entities designated by the Owner, in the manner, at the times and to the extent directed by the Construction Program Manager to the extent specifically produced or specifically acquired by the Contractor for the performance of such portion of the Work as had been terminated, the following:

(1) the fabricated or unfabricated parts, Work in process, partially completed supplies and equipment, materials, parts, tools, dies, jigs and other fixtures, completed Work, supplies and other material produced as part of, or acquired in connection with the performance of, the Work terminated by the notice of termination; and

(2) the completed or partially completed plans, drawings, information, releases, manuals and other property related to the Work and which, if the Contract had been completed, would have been required to be furnished to the Owner;

.7 use his best efforts to sell, in the manner, at the times, to the extent and at the price or prices directed or authorized by the Construction Program Manager, any property of the types referred to in Clause 14.5.1.6; provided, however, that the Contractor:

(1) shall not be required to extend credit to any buyer, and

(2) may acquire any such property under the conditions prescribed by and at a price or prices approved by the Construction Program Manager; and provided further that the proceeds of any such transfer or disposition shall be applied in reduction of any payments to be made by the Owner to the Contractor under the Contract or shall otherwise be credited to the Contract Sum covered by the Contract or paid in such other manner as the Construction Program Manager may direct;

.8 complete performance of such part of the Work as shall not have been terminated by the notice of termination; and

.9 take such action as may be necessary, or as the Construction Program Manager may direct, for the protection and preservation of the property related to the Contract which is in the possession of the Contractor and in which the Owner has or may acquire an interest.

14.5.2 The Contractor shall, from the effective date of termination until the expiration of three (3) years after final settlement under the Contract, preserve and make available to the Owner, at all reasonable times at the office of the Contractor, but without direct charge to the Owner, all his books, records, documents and other evidence bearing on the costs and expenses of the Contractor under the Contract and relating to the Work terminated hereunder, or, to the extent approved by the Construction Program Manager, photographs, micro-photographs or other authentic reproductions thereof.

14.5.3 The Contractor shall refund to the Owner any amounts paid by the Owner to the Contractor in excess of costs reimbursable under Paragraph 14.4.

14.5.4 The Contractor shall be entitled to only those damages and that relief from termination by the Owner as specifically provided in Article 14.

END OF ARTICLE 14

END OF GENERAL CONDITIONS

SUPPLEMENTARY CONDITIONS

GENERAL CONDITIONS

The General Conditions are further revised and supplemented by the provisions of these Supplementary Conditions. The General Conditions and the Supplementary Conditions are applicable to all of the Work under this Contract and shall apply to the Contractor and all Subcontractors and Sub-Subcontractors.

SUPPLEMENTS:

The following supplements modify, change, delete, or add to the General Conditions. Where any article of the General conditions is modified or any paragraph deleted, subparagraph or clause thereof is modified, or deleted by these supplements, the unaltered provisions of such article, paragraph, subparagraph or clause shall remain in effect.

Supplemental Condition 3.2

Notwithstanding anything to the contrary contained in the other parts of the Contract Documents, the St. Johns County School District does not intend to utilize the services of a Construction Program Manager on this Project. As a result, the duties, services and activities described for the Construction Program Manager in the other portions Contract Documents shall be performed by the Design Consultant. The other portions of the Contract Documents are hereby amended to substitute the term Design Consultant in lieu of the term Construction Program Manager when referencing those duties, services or activities. This provision shall control over any conflicting provisions contained elsewhere in the Contract Documents.

END OF SUPPLEMENTARY CONDITIONS

PART 1 GENERAL

1.1 SECTION INCLUDES

A. Quality assurance.

1.2 RELATED SECTIONS

A. General Conditions: Reference standards.

1.3 QUALITY ASSURANCE

A. For Products or workmanship specified by association, trades, or other consensus standards, comply with requirements of the standard, except when more rigid requirements are specified or are required by applicable codes.

B. Conform to reference standard (latest edition) concurrent with the date of the Contract Documents.

C. The roof system shall include all affiliated electrical, mechanical, architectural and structural work, meeting the following Building Codes:

1. The **2017 Sixth Edition Florida Building Code**.
   a. Volume I: Building (includes energy, accessibility and state agency regulations)
   b. Volume II: Plumbing
   c. Volume III: Mechanical
   d. Volume IV: Fuel Gas.

2. The Florida Fire Prevention Code.

3. Any local amendments to these codes which can be obtained from the Florida Department of Community Affairs, the Florida Department of Insurance, and/or the State Fire Marshal, respectively.

4. In addition to **Florida Building Code**, 2017 Sixth Edition, all, or the specific portions cited, of the following building codes were incorporated by reference and made a part of the requirements of this project. If there should be conflicting requirements between these codes and requirements, the more or most stringent requirement shall apply.
   a. **AHERA.** Asbestos Hazard Emergency Response Act, 40 CFR, Part 763, as revised July 1, 1995.
   b. **ANSI**. American National Standards Institute. References to ANSI standards shall be the edition listed in the current edition of the ANSI standards.
   c. **ASCE**. American Society of Civil Engineers. References to ASCE standards shall be the edition listed in the current edition of the ASCE standards.
   d. **ASHRAE**. American Society of Heating, Refrigeration, and Air Conditioning Engineers.

e. **ASTM**. American Society for Testing Materials. References to ASTM standards shall be the edition listed in current edition of the ASTM standards.
f. **FEMA.** Federal Emergency Management Agency. Rules and Regulations 44 CFR, Parts 59 and 60, revised October 1, 1995, for flood plain criteria governing insurability of facilities constructed in flood plain areas.
g. **NEC**. National Electrical Code, 2014. (NFPA 70)
h. **NFPA**. National Fire Protection Association. Referenced to NFPA codes shall be the edition listed in the current edition of the National Fire Codes.
i. **OSHA.** Occupational Safety and Health Administration, U.S. Dept. Of Labor, 29 CFR as revised July 1, 1995.
j. **SMACNA**. Architectural Sheet Metal Manual, current edition.
k. **SREF**. State Requirements for Educational Facilities (2012).
l. **TMS**. The Masonry Society, 2011 edition

D. Obtain copies of standards when required by the Contract Documents or as necessary to complete the work properly.

E. Maintain copy at project site during submittals, planning, and progress of the specific work, until Substantial Completion.

F. Should specified reference standards conflict with Contract Documents, request clarification from the Architect before proceeding.

G. The contractual relationship, duties, and responsibilities of the parties in Contract nor those of the Architect shall not be altered from the Contract Documents by mention or inference otherwise in any reference document.

PART 2 PRODUCTS Not Used

PART 3 EXECUTION Not Used

END OF SECTION

PART 1 GENERAL

1.1 RELATED DOCUMENTS

A. Drawings and General Provisions of the Prime Contract, including General and Supplementary Conditions and other Division 01 Specification Sections, apply to Work of this Section.

1.2 WORK UNDER SINGLE CONTRACT

A. The Work of this Contract consists of roof replacement and repairs at First Coast Technical College, located at 2980 Collins Avenue, St. Augustine, Florida 32084. Work will be limited to Building B.

B. The Owner intends to award a single prime base bid contract, titled "General Construction Contract," for Work to be performed for this Project. The Contractor shall comply with the requirements of the General Conditions and the Supplementary Conditions in accomplishing his Work on this Project.

C. Base Bid General Construction Contract: Includes all roofing, general trades, mechanical, and electrical items specified in Divisions 01 through 16 of the Specifications and Work shown on the Drawings.

D. The Contractor shall be responsible for demolition and disposal of existing items relative to this Contract.

E. The "Contract Documents," as defined in the General Conditions, include "the Drawings." Although Drawings are grouped and identified by classification of the Work, the Contractor shall be responsible for the Work as specified herein and as indicated on the Drawings. Although the majority of the Drawings are "to scale," the Contractor is directed to use indicated dimensions for determining material quantities and for other reasons. No additional monies will be allowed due to the Contractor using "scaling instruments" to determine material quantities or for other reasons.

F. The "Contract Documents," as defined in the General Conditions, include "the Drawings", the Contractor shall be responsible for the Work as specified herein and as indicated on the Drawings. Although the majority of the Drawings are "to scale," the Contractor is directed to field verify all dimensions and assumptions used for determining material quantities and for other reasons. No additional monies will be allowed due to the Contractor for use of "scaling instruments" to determine material quantities, lack of adequate field investigation, or for other reasons

1.3 ADMINISTRATIVE RESPONSIBILITIES OF THE CONTRACTOR

A. The Contractor shall be responsible for the maintenance of the construction schedule and the management of the Work.
   1. The Contractor shall read the Specifications and Drawings for other separate contracts direct with the Owner for fixed equipment and the like, to be incorporated and attached or built in to the Work; and familiarize himself with the requirements and responsibilities of other Contracts to enable the required coordination and supervision.
   2. The Contractor shall also familiarize himself with other items to be incorporated into the Work including equipment and Work by the Owner.
   3. The Contractor shall cooperate with his subcontractors in notifying them when the Work is at a stage to require their services and shall notify the Architect in the event that such subcontractors do not carry out their responsibilities in connection with such notification.
   4. The Contractor shall maintain a full-time non-working supervisor, on the job site whenever any work by their own forces or any of their subcontractors is in progress.

B. The Contractor shall cooperate with and assist his subcontractors in the preparation of construction progress and procedures, schedule of product deliveries, and their effect on the overall project progress and completion. The subcontractors shall cooperate in getting their Work and the Work of their sub subcontractors completed according to the schedule as prepared and maintained by the Contractor. Each subcontractor shall immediately notify the Contractor of any delay in delivery of products or the scheduled date of completion that may affect the total progress of construction.

C. The Contractor, when required to make connections to existing utilities, especially sewage where gravity flow occurs, shall verify grades and locations at points of such connections and shall notify the Architect of circumstances which would adversely affect the proper flow or connection to such facilities.

D. The Architect and Owner will not tolerate any visible or audible actions initiated or responded to by any employees or Contractors on this Project toward anyone. Violators shall be promptly removed from the site.

E. Contractors must expend their best effort toward protection of the health, safety, and welfare of occupants on the Owner's property during the course of Work on this Project.

F. Contractors and Subcontractors shall be subject to such rules and regulations for the conduct of the Work as the Owner may establish. Employees shall be properly and completely clothed while working. Bare torsos, legs and feet will not be allowed. Possession or consumption of alcoholic beverages or drugs, tobacco or other noxious behavior on the site is strictly prohibited.

G. Possession or transportation of firearms or other weapons on school property is strictly prohibited. Violators shall be promptly removed from the site. Smoking is not permitted on school property or within school buildings.

1.4 DESCRIPTION OF WORK – ALL ROOF AREAS:

The scope of work for this project at all the existing thermoplastic single-ply roof areas under this contract is considered to include the following:

A. Remove existing thermoplastic single-ply roof system down to the existing lightweight insulating concrete (LWIC) deck. Remove all associated coping caps, metal flashings and counterflashings as required to perform the work indicated.

B. Repair and/or replace any significantly damaged or deteriorated LWIC deck areas, replace any damaged wood blocking and nailers where required. The repair work shall be performed per the unit price allowances as defined within section 01220.

C. Remove the existing metal roof panels, underlayment and flashing installed at southwest entrance mansard, inspect existing plywood deck and replace any deteriorated deck per the unit price allowances as defined within section 01220.

D. Verify existing deck sheathing is properly secured, install additional fasteners to anchor plywood to underlying framing, then apply a self-adhesive, modified bitumen membrane underlayment over the existing plywood sheathing.

E. Provide and install new Kynar pre-finished 0.040” aluminum standing seam mansard roof panels as indicated per the project details. Install all associated fascia cladding metal along perimeter per documents. Color to be selected by the Owner.

F. Remove and reinstall on the existing curbs all power ventilators as required to install the new roof and flashing system. Raise the curb height and extend the ductwork where required to provide the minimum flashing height defined by the project details.

G. Remove all existing skylights, raise the existing curb height as required to provide the minimum flashing height defined by the project details, install new flashings and install new unit skylights.

H. Raise and/or extend the existing plumbing vents through the roof (VTR) as required to provide a minimum height of 8” above the finished roof surface.

I. Existing curb mounted HVAC “penthouse” units to be removed and reinstalled at the existing locations as required to raise the curb height to provide the minimum flashing height defined by the project details. Extend the ductwork, install new base flashing and counterflashing per the project details, reconnect all services as needed. Provide new curb mounted weatherheads at existing locations per project details at roof area “B”, modify existing piping and electrical services as needed.

J. Remove and replace existing hot stack flues with new stainless steel flues, provide and install new pre-fabricated roof curbs, and provide new round-to-square curb cap adapters per the project details.

K. Remove abandoned antenna, support stands, curbs and pitch pans as indicated on the roof plan, and infill existing deck opening as indicated per documents.

L. Minimally fasten a fiberglass vented base sheet, then install rigid insulation where indicated by the roof plan and specifications as follows:
   1. Roof Area “A”: Install 1/8” per foot tapered rigid insulation at the northwest and southeast third of the roof, starting at 1.3” thickness at the drip edges. Followed by 1/4" per foot tapered rigid insulation at the center third of the roof.
   2. Roof Area “B”: Install 1/8” per foot tapered rigid insulation, 4 feet wide at the perimeter drip edge of this roof area, starting at 1.3” thickness at the drip edges. Followed by 1.8” thickness non-tapered rigid insulation within the sloped field of the roof to comply with the new energy code requirements.
   3. Roof Area “C”: Install 1.3” thick non-tapered rigid insulation throughout the field of the roof.
   4. Minimally anchor rigid insulation as required at all roof areas, then apply a 1/4” thick gypsum coverboard, and mechanically anchor the entire insulation system to the underlying steel roof deck.

M. Provide new crickets upslope of all rooftop equipment curbs to ensure positive drainage, form crickets using 1/2” per foot tapered rigid insulation to provide positive drainage or a cementitious compound intended for this purpose prior to the application of the 1/4” thick gypsum coverboard.

N. Apply a new thermoplastic single-ply flashing membrane along the building perimeter edge and install new PVC coated aluminum drip edge per the project details, secure to underlying pressure-treated wood blocking.

O. Apply a new thermoplastic single-ply roof membrane mechanically attached to the underlying structural roof deck as defined by the manufacturer’s project specific engineering. Heat weld roof membrane to coated edge metal and all laps and secure to all curbs and transitions with an aluminum termination bar.

P. Adhere the thermoplastic base flashing membrane to any curbs and secure, then heat weld flashing to the membrane at the field of the roof per the project details.

Q. Install new gypsum roof board to the existing parapet wall surfaces to provide a uniform substrate, then adhere a thermoplastic base flashing membrane to the curb or wall per the project details, heat weld to the membrane at the field of the roof. Flashing membrane is to run across and down the exterior face of all the parapet, transition and area divider walls per the project details.

R. Install two new primary PVC coated, spun aluminum roof drains with new discharge piping at the existing locations per the project details, no modification of the existing piping is required.

S. Install new overflow scuppers at the north drains at roof area “C” as indicated on the plans, provide new opening through the masonry parapet wall at this location.

T. Install the set on accessories and flash in accordance with project details. Provide and install all edge metal along outer edge of parapet and “strip-in” with flashing membrane.

U. Edge / head transition metal above metal roof panels must be installed in sequence with both roof systems for proper installation.

V. Install new painted, thick wall, ultraviolet resistance PVC condensate drain piping on new composite support blocks, replicate existing routing and discharge points.

W. Remove existing wall mounted roof access ladder and discard, provide and install new aluminum fabricated roof access ladder per the project details at the existing location.

X. Remove remains of existing roofing at the cast-in-place concrete canopy roofs above the overhead doors, clean and prepare surface as recommended by the manufacturer and apply new protective coating. Provide aluminum drip edge per project detail at all perimeter edges.

Y. Clean roof membrane with mild detergent and a pressure washer upon completion of the work prior to acceptance by the Owner.

Z. Upon completion, provide the requested 20-year NDL manufacturer’s weathertightness warranty with an elevated wind speed / pressure rider, the included applicator’s warranty and all required close-out documents.

1.5 WORK BY OWNER

A. The Owner intends to complete the following items of Work outside the provisions of these Contract Documents. The Contractor shall not restrict or interfere with the Owner's right to the Project to accomplish this Work.
   1. Items which may be deleted from Contracts for Work as required by the Contract Documents.
   2. Equipment and furniture except as scheduled and specified under Divisions 11 and 12 and shown on the Drawings.
   3. The purchase and supplying of certain materials as noted in the Project Manual.

1.6 PERMITS, FEES AND NOTICES

A. The Contractor shall secure and pay for all permits, governmental fees, and licenses necessary for the proper execution and completion of the Work, which are applicable at the time the bids are received, whether or not effective or scheduled to go into effect, and shall obtain any general building permit (no cost from school district) and other approvals, permits, and fees that may be required by the local governing political entity.

B. Utility Tie-Ins: Shall be arranged by the General Contractor with local utility company and other involved parties for minimum interruption of service.

C. Shutdowns of existing systems shall be limited to minimum time required and scheduled with other involved parties. Provide 2 days written notice of shutdown to Architect and Owner.

D. Inspections of installed work shall be performed by the governing authority as arranged for by the Contractor. Work shall not be covered until approved.

E. The Contractor shall give notices and comply with laws, ordinances, rules, regulations, and orders of public authority bearing on the performance of his Work. If the Contractor observes that the Contract Documents are at variance therewith, he shall promptly notify the Architect in writing, and necessary changes shall be adjusted by appropriate notification. If the Contractor performs any Work knowing it to be contrary to such laws, ordinances, rules, and regulations, and without such notice to the Architect, he shall assume full responsibility therefore and shall bear costs attributable thereto

1.7 CONTRACTOR USE OF SITE AND PREMISES

A. General: During the construction period, the Contractor shall have full use of the premises for construction operations, including use of the site. The Contractor's use of the premises is limited only by the Owner's right to perform work or to retain other Contractors on portions of the Project.

B. Limit use of site and premises to allow:
   1. Owner occupancy.
   2. Work by others (if still in progress).
   3. Use of site and premises by the public.

C. Access to Site: Limited to agreed-upon staging areas and access routes.

D. Emergency Building Exits During Construction: Maintain at all times.

E. Time Restrictions for Performing Interior Work: After school hours.

F. Utility Outages and Shutdown: Allowed only upon coordination with and notification of the Owner. Limit to after-hours.

G. Be responsible for items of work and material stored on premise.

1.8 PROTECTION OF EXISTING BUILDING, FINISHES, FURNISHINGS AND EQUIPMENT

A. Comply with all requirements of Section 01500 of these specifications in regards to protection and cleaning of the existing site, building, finishes, furnishings and equipment.

B. Prior to construction beginning at any interior location, the contractor shall remove and store as directed by the Owner all equipment, furnishings, books and materials directly below, and within 10 feet of the work area.
   1. Protect existing furnishings and floor finishes to remain directly below, within 10 feet of the work area, and at any construction traffic areas with a 35 mil minimum thickness single-ply roof membrane, loose laid over the existing construction, seal all joints. At any areas which will experience construction traffic, or support additional loading due to ladders, scaffolding, or other construction activity are to also be protected with a minimum of two layers of 5/8" minimum thickness plywood, (stagger all joints), set over 1" minimum thickness of 100 psi compressive strength expanded polystyrene foam board (EPS).

C. In the event of water intrusion into the building due to the work of this contract, the contractor is to retain a professional Cleaning and Restoration service to correct any interior conditions within 24 hours of the event to avoid permanent damage to the finishes and interior materials.

D. To protect the interior finishes furnishings and equipment; the building's air conditioning system must remain in service and active unless a service outage is coordinated with the Owner. Work must be planned to comply with the following criteria:
   1. In general classroom areas, no more than three (3) air conditioning units per wing / hall can be off-line at any one time, and for no more than 48 hours per unit.
   2. In the Media Center, and other areas sensitive to temperature and/or humidity, no more than one air conditioning unit per wing / hall can be off-line at any one time, and for no more than 24 hours per unit.

E. Prior to construction, mark all damaged ceiling panels within the buildings for future removal and replacement, these ceiling panels will be replaced under the unit price allowances. During construction, inspect the ceiling panels on a daily basis for additional damage or fallen tiles, remove and replace immediately any wet or fallen ceiling tiles. Upon completion of the roof replacement, all existing and newly damaged ceiling panels are to be replaced by a specialized acoustic ceiling installer to ensure proper fit and finish.

F. The contractor must provide adequate temporary protection to properly weatherproof the building and roof replacement areas on a daily basis, as defined by the contract documents. It is the contractor's responsibility to protect the existing construction and finishes from water intrusion during the course of this project.

G. The contractor shall police and clean the interior and exterior areas of work of this project and discard all debris in the appropriate contractor provided waste receptacle / "dumpster" at the end of each work day. Comply with section 01500 of these specifications fully.

1.9 LABOR AND MATERIALS

A. Unless otherwise specifically noted, the Contractor shall provide and pay for labor, materials, equipment, tools, construction equipment and machinery, water, heat, utilities, transportation, and other facilities and services necessary for the proper execution and completion of his Work, whether temporary or permanent and whether or not incorporated or to be incorporated in the Work.

B. The Contractor shall enforce strict discipline and good order among his employees or other persons carrying out Work of his contract and shall not permit employment of unfit person or persons or anyone not skilled in the task assigned to them.

1.10 CUTTING AND PATCHING

A. Refer to Section 01731 – Cutting and Patching, for provisions on this subject.

1.11 VERIFICATIONS OF EXISTING DIMENSIONS

A. When verification of existing dimensions is advisable or required, the Contractor requiring said verification for the construction or fabrication of his material shall be responsible for the procurement of the field information.

1.12 PROJECT SECURITY

A. The General Contractor shall be responsible for developing and conducting a security program, specifically oriented for the protection of preventing damage, injury or loss to the entire project site and other property at the site or adjacent thereto. This shall be acceptable to the Owner and Architect, and shall remain in effect through Substantial Completion of the Project.

1.13 UTILITY SHUT-OFFS AND CHANGEOVERS

A. Notify the Architect and Owner at least 24 hours in advance of utility connections, or shut-offs.

B. Coordinate these operations with the Owner, through the Architect, and complete the Work in the minimum amount of time.

1.14 OWNER OCCUPANCY AND ACCESS

A. The Owner will occupy the premises during the entire period of construction. Allow for the conduct of normal operations.

B. Cooperate with Owner to minimize conflict, and to facilitate Owner's operations.

C. Schedule the Work to accommodate this requirement.

D. Comply with established Owner Policies.

E. Maintain “Good Housekeeping” on site as directed by Owner and Architect.

F. Access for ongoing inspections to the premises and work underway by the Owner and Architect shall not be restricted.

1.15 SCHEDULE

A. A progress schedule shall be made to include:
1. A start date.
2. A reasonable progression of work by Phase, Building, Task; i.e.
3. A start and finish date for construction materials and components listed in Divisions 2 thru 16 as defined by Section 01320 of these specifications.

1.16 PROJECT RAIN DAY FORM

A. Maintain on a daily basis and submit with each Application for Payment, the Project Rain Day Form attached at the end of this section. Project Rain Day Form shall be signed by the Owner's Representative or Architect daily. See article 8.3 of the General Conditions for additional information regarding how delays due to weather are addressed.

1.17 INTERIOR INSPECTION FORM

A. Prior to commencing work, the Contractor will schedule a meeting with the Owner's Representative or Architect, to inspect and document the condition of the building interior(s) in both written and digital video or photographic form. Log conditions of ceiling tiles, lights, walls and flooring materials using the Interior Inspection Form attached at the end of this Section. Submit two copies of the digital files and the form signed by the Contractor and Owner's Representative to the Architect prior to the start of construction.

1.18 EXTERIOR INSPECTION FORM

A. Prior to commencing work, the Contractor will schedule a meeting with the Owner's Representative or Architect, to inspect and document the condition of the building exterior conditions in both written and digital video or photographic form. Log conditions of exterior walls, building attachments, sidewalks, miscellaneous paving and landscaping using the Exterior Inspection Form attached at the end of this Section. Submit two copies of the digital files and the form signed by the Contractor and Owner's Representative to the Architect prior to the start of construction.

PART 2 PRODUCTS Not Used

PART 3 PRODUCTS Not Used

END OF SECTION

PROJECT RAIN DAY FORM

Month: _____
Project Name:_____
Project No:_____
Contractor:_____
Owner's Authorized Rep.:_____

DAY	MORNING COND./TIME	AFTERNOON COND./TIME	SUPERINTENDENT SIGNATURE	AUTH. OWNER'S REP. SIGNATURE
1				
2				
3				
4				
5				
6				
7				
8				
9				
10				
11				
12				
13				
14				
15				
16				
17				
18				
19				
20				
21				
22				
23				
24				
25				
26				
27				
28				
29				
30				
31				

INTERIOR INSPECTION FORM

ROOM NO.	CEILING TILE CONDITION			LIGHT LENSE STAINS	WALL CONDITION	CARPET CONDITION
	BROKEN	STAINED	CRACKED			

EXTERIOR INSPECTION FORM

ROOF AREA	SIDEWALK CONDITION			GRASS	SHRUBBERY CONDITIONS	MISC. CONDITIONS
	BROKEN	STAINED	CRACKED			

PART 1 GENERAL

1.1 SECTION INCLUDES

A. This section identifies each unit price by letter and describes possible additional changes to be incorporated into the work.

B. Unit prices for products shall be stated in the blank spaces provided in the Bid Form and the cost of the estimated quantities of products shall be included in the base bid.

C. Measurement and payment criteria applicable to the work performed under a unit price payment method.

D. Defect assessment and nonpayment for rejected work.

1.2 AUTHORITY:

A. The Owner and Architect will verify measurements and quantities

1.3 UNIT PRICES FOR PRODUCTS

A. The amount of each unit price includes:

1. The cost of the product to the Contractor or Subcontractor, less any applicable trade discounts.
2. Delivery to the site.
3. Labor required.
4. Applicable Taxes.
5. Handling at the site, including unloading, uncrating, and storage.
6. Protection from the elements and from damage.
7. Labor for installation and finishing, and other expenses required to complete the installation.
8. Contractor's and Subcontractor's overhead and profit.
9. Waste due to material size, overlap, or other factors is to be factored into the unit price costs

B. Adjustments for Costs and Payment:

1. Should quantities be more or less than the specified quantities in the base bid, the Contract Amount will be adjusted accordingly by change order.
2. A unit price shall maintain the same value for deleting as for adding an item.
3. Final payment for work governed by unit prices will be made on the basis of the actual measurements and quantities as determined by field inspection by the Owner and the Design Consultant, multiplied by the unit price for work.

1.4 DESCRIPTION OF UNIT PRICES

A. Unit Price "A": Cost per lineal foot to remove any existing deteriorated wood blocking and/or fascia along roof edge or within roof system or accessories and replace with new **2 x 4 pressure treated wood blocking** per Section 06100. The exact locations and extent of replacement to be determined in the field by the Owner and Architect. Base bid shall include the replacement of **One hundred (100) lineal feet** of pressure treated wood blocking and/or fascia. If this quantity is not used, the Owner will receive a credit for the unused quantity based on this same unit cost.

B. Unit Price "B": Cost per square foot to remove any existing deteriorated plywood sheathing within mansard roof system and replace with new **5/8" pressure treated plywood sheathing** per Section 06100. The exact locations and extent of replacement to be determined in the field by the Owner and Architect. Base bid shall include the replacement of **Sixty-Four (64) square feet** of pressure treated plywood sheathing. If this quantity is not used, the Owner will receive a credit for the unused quantity based on this same unit cost.

C. Unit Price "C": Cost per square foot to remove existing deteriorated **lightweight insulating concrete (LWIC)** and replace with new LWIC patching compound, such as Siplast Zono-Patch (or equal), with a minimum compressive design strength of 300 psi at 28 days. Match existing LWIC manufacturer and product if possible, or utilize appropriate manufacturer recommended patching methods and material. The exact locations and extent of replacement is to be determined in the field by Owner and Architect. Base bid shall include the replacement of **one hundred (100) square feet** at 3" thickness of damaged lightweight insulating concrete. If these quantities are not used, the Owner will receive a credit for the unused quantity based on this same unit cost. "Divot" repair as a result of existing roof tear-off is to be considered part of the base bid services, and not part of the unit price costs.

D. Unit Price "D": Cost per linear foot to provide **protective walk pads** for rooftop maintenance traffic as approved by the manufacturer. Walk pads can be either those provided by the manufacturer, or an additional layer of single-ply membrane adhered to primary membrane as specified within section 07530. Walk pads to be 3 feet wide. Fully adhere to the finished roof system using the manufacturer approved mastic. The exact locations and extent of walk pad placement shall be determined in the field by the Owner and Architect. Base bid shall include the application of **Two hundred (200) linear feet** of walk pad application. If these quantities are not used, the Owner will receive a credit for the unused quantity based on this same unit cost.

E. Unit Price "E": Cost per square foot to remove and replace existing damaged and/defaced "lay-in" **suspended acoustical ceiling tile** to match size, type, manufacturer, and finish of the existing tile, which will need to be field verified by the contractor. The exact locations and extent of replacement to be determined in the field by the Owner and Architect. The base bid shall include removal and replacement of **two hundred (200) square feet** of damaged acoustic ceiling tiles. If this quantity is not used, the Owner shall receive a credit for the unused quantity based on the unit price. NOTE: Additional ceiling tile damaged during the

course of construction by construction events shall be replaced at no additional cost to the Owner.

1.5 DEFECT ASSESSMENT

A. Immediately replace the work not conforming to specified requirements and as directed by the Architect and Owner.

B. It is the authority of the Architect and Owner to assess the defect and identify payment adjustment.

1.6 NONPAYMENT FOR REJECTED PRODUCTS:

A. Payment will not be made for any of the following:
1. Products wasted or disposed of in a manner that is not acceptable.
2. Products determined as unacceptable before or after payment.
3. Products not completely unloaded from the transportation vehicle.
4. Products placed beyond the lines and levels of the required work.
5. Products remaining at site after completion of work.
6. Loading, hauling and disposing of rejected products.

PART 2 PRODUCTS Not Used

PART 3 EXECUTION Not Used

END OF SECTION

PART 1 GENERAL

1.1 SECTION INCLUDES

A. Procedures for preparation and submittal of applications for payment.

1.2 RELATED SECTIONS

A. Agreement: Contract Sum/Price and unit prices, amounts of progress payments and retainage, time schedule for submittals.

B. General Conditions: Progress payments and final payment.

C. Section 01290 - Modification Procedures: Procedures for changes to the Work.

D. Section 01320 - Construction Schedules and reports

E. Section 01330 - Submittals: Submittal procedures

F. Section 01770 - Contract Closeout: Final payment.

1.3 FORMAT

A. AIA G702 - Application and Certificate for Payment and AIA G703 - Continuation Sheet; Current Edition

B. Contractors may purchase Application Forms on-line directly from the AIA. Link to the following (press control then right click mouse):
https://documentsondemand.aia.org/.

C. For each item, provide a column for listing each of the following:
1. Item Number.
2. Description of work; broken into sub-categories of labor and materials.
3. Scheduled Values for each sub-category.
4. Previous Applications.
5. Work in Place and Stored Materials under this Application.
6. Authorized Change Orders.
7. Total Completed and Stored to Date of Application.
8. Percentage of Completion.
9. Balance to Finish.
10. Retainage.

1.4 PREPARATION OF APPLICATIONS

A. Present required information in handwritten form for field verification by the Architect. Once approved, supply in typewritten form.

B. Each Application and Certificate for Payment must have authentic signatures and seals of all parties signing the document. Photocopies of signatures or seals will not be accepted.

C. Application Form:
   1. Printed Application for Payment: One of the AIA G702 and AIA G703 forms must be an original printed document with a red label. The completed original application may be copied as required prior to signing and sealing.
   2. Electronic Documents: Electronic documents must be produced under license from The American Institute of Architects and may be photocopied as required prior to signing and sealing. Include registration number on submitted document.
   3. Contractors may purchase Application Forms on-line directly from the AIA. Link to the following (press control and right click mouse): https://documentsondemand.aia.org/.
   4. Electronic copies, computer reproductions, or photocopies of authentic documents will not be accepted.

D. Submit a fully completed Project Rain Day Form and revised project schedule with each Application for Payment. Each full or partial Rain Day claimed must be certified by the designated on-site representative for the Owner, as well as the Contractor. The Application for Payment will not be processed without submission of these records.

E. Execute certification by signature of authorized officer.

F. Use data from approved Schedule of Values. Provide dollar value in each column for each line item for portion of work performed and for stored Products.

G. List each authorized Change Order as an extension on AIA G703 - Continuation Sheet, listing Change Order number and dollar amount as for an original item of Work.

H. Prepare Application for Final Payment as specified in Section 01770.

1.5 SUBMITTAL PROCEDURES

A. Submit a minimum of four (4) copies of each Application for Payment.

B. Submit an updated construction schedule with each Application for Payment.

C. Payment Period: Submit on (or about) the 25th of each month.

D. Submit with transmittal letter as specified for Submittals in Section 01330.

1.6 SUBSTANTIATING DATA

A. When Architect requires substantiating information, submit data justifying dollar amounts in question.

B. Provide one copy of data with cover letter for each copy of submittal. Show application number and date, and line item by number and description.

PART 2 PRODUCTS Not Used

PART 3 EXECUTION Not Used

END OF SECTION

PART 1 GENERAL

1.01 RELATED DOCUMENTS

A. Drawings and general provisions of the Contract, including General and Supplementary Conditions and other Division 01 Specification Sections, apply to this Section.

1.02 SUMMARY

A. This Section specifies administrative and procedural requirements governing prime contractor's Schedule of Values.
   1. Coordinate the Schedule of Values with the Applications for Payment, Project Schedule, Submittal Schedule, and List of Subcontracts.
   2. Contractors using computer generated AIA Forms must submit a copy of their license, including license number, with each request for payment.

B. **Progress payments will not be processed without an approved Schedule of Values on file.**

1.03 SCHEDULE OF VALUES

A. Coordination: Contractor shall coordinate preparation of its Schedule of Values for its part of the Work with the Project Schedule.
   1. Correlate line items in the Schedule of Values with other required administrative schedules and forms, including:
      a. Project Schedule.
      b. Application for Payment forms, including Continuation Sheets.
      c. List of subcontractors.
      d. Schedule of allowances.
      e. Schedule of alternates.
      f. List of products.
      g. List of principal suppliers and fabricators.
      h. Schedule of submittals.
   2. Within 15 days of award of Contract, each awarded Contractor shall submit to the Architect a Schedule of Values, for approval, showing accurate costs for the items of work assigned to the Contractor, defined under Section 01110 – Summary of Work.
   3. Sub-schedules: Where Work is separated into phases requiring separately phased payments, provide sub-schedules showing values correlated with each phase of payment.

B. Format and Content: Use the Project Manual table of contents as a guide to establish the format for the Schedule of Values. The Schedule of Values shall include at a minimum a line item for labor and material costs for each specification section assigned to the Contractor under Section 01110 – Summary of Work, and shall further divide the work into a sufficient number of individual work items to serve as an accurate basis for Contractor's Application for Payment. Each work item shall receive its prorated share of profit and overhead, including a line item for closeout. The Schedule of Values shall consist of a complete breakdown of the Contractor's contract sum showing the various items of work, divided so as to facilitate the approval of payments to the Contractor for Work completed. In addition to and conjunctive with the division of various items of work, the breakdown shall separate individual buildings within the project shall separate site work from building(s) components and shall separate remodeling/renovation work from new construction work. The Schedule of Values shall be prepared in a format as directed by the Architect, showing the breakdown of items of Work and supported by such data to substantiate its correctness as the Architect may require. The contract breakdown shall be the same form as that to be used in submitting request for payments as covered by Article 9, of the General and Supplementary Conditions. Each item of Work shall have indicated a separate cost of labor and material. This schedule when reviewed by the Architect and Owner shall be used as the basis of approving payments along with establishing percentages of Work complete.

1. Identification: Include the following Project identification on the Schedule of Values:
   a. Project name and location.
   b. Name of the Architect.
   c. Project number.
   d. Contractor's name and address.
   e. Date of submittal.
2. Arrange the Schedule of Values in tabular form with separate columns to indicate the following for each item listed.
   a. Related Specification Section or Division.
   b. Description of Work.
   c. Name of subcontractor.
   d. Name of manufacturer or fabricator.
   e. Name of supplier.
   f. Change Orders (numbers) that affect value.
   g. Dollar value.
   h. Percentage of Contract Sum to nearest one-hundredth percent, adjusted to total 100 percent.
3. In addition to the sections assigned to the Contractor as defined above, Contractors shall include the following line items on their Schedule of Values:
   a. Bonds: Performance, Labor and Material (if required).
   b. Mobilization.
   c. Demobilization. (** Note that demobilization cost shall be equal to or greater than any mobilization costs)
   d. Insurance / Hazcom / Safety.
   e. Submittals in the amount of 2 percent of the Contract; however, not less than $1,000.00 or more than $15,000.00.

f. Project Meetings in the amount of $250.00 times the anticipated number of meetings the Contractor will be required to attend during the course of the Project.
g. Cost for administration of Owner Direct Purchase (ODP) program
h. Daily cleanup (in the amount of 1 percent of the total contract amount).
i. Closeout in an amount equal to 1 percent of the Contract amount; however, not less than $500.00 nor more than $10,000.00.

4. Provide a breakdown of the Contract Sum in sufficient detail to facilitate continued evaluation of Applications for Payment and progress reports. Coordinate with the Project Manual table of contents. Break principal subcontract amounts down into several line items. Schedule of Values shall be coordinated with the Construction Schedules such that the percentages of Work completed closely relates to the values for the Work shown on the request for payments. At the beginning of the Project, the Contractor shall prepare a schedule of monthly progress payments showing the amount the Contractor may require for the Work proposed to be completed. The purpose of this schedule is to allow the Owner to determine what amounts of funds will be required to have available each month during the progress of construction for progress payments.
5. Round amounts to nearest whole dollar; the total shall equal the Contract Sum.
6. Provide a separate line item in the Schedule of Values for each part of the Work where Applications for Payment may include materials or equipment, purchased or fabricated and stored, but not yet installed.
   a. Differentiate between items stored on-site and items stored off-site. Include requirements for insurance and bonded warehousing, if required.
7. Provide separate line items on the Schedule of Values for initial cost of the materials, for each subsequent stage of completion, and for total installed value of that part of the Work.
8. Unit-Cost Allowances: Show the line-item value of unit-cost allowances, as a product of the unit cost, multiplied by the measured quantity. Estimate quantities from the best indication in the Contract Documents.
9. Margins of Cost: Show line items for indirect costs and margins on actual costs only when such items are listed individually in Applications for Payment. Each item in the Schedule of Values and Applications for Payment shall be complete. Include the total cost and proportionate share of general overhead and profit margin for each item.
   a. Temporary facilities and other major cost items that are not direct cost of actual work-in-place may be shown either as separate line items in the Schedule of Values or distributed as general overhead expense, at the Contractor's option.
10. Schedule Updating: Update and resubmit the Schedule of Values prior to the next Applications for Payment when Change Orders or Construction Change Directives result in a change in the Contract Sum.

C. Schedule of Values shall be typed or printed on AIA Document G703 (1992) – Continuation Sheet and attached to AIA Document G702 (1992) – Application and Certificate for Payment.

D. Each Schedule of Values shall have the Contractor's name, Bid Category name and number, project name and number and shall be dated and signed.

E. Should the Schedule of Values be "rejected, resubmit", the resubmittal is due within 5 days of receipt of rejected schedule.

PART 2 PRODUCTS

(Not Applicable)

PART 3 EXECUTION

(Not Applicable)

END OF SECTION

SCHEDULE OF VALUES FORMAT

A	B	C
Item No.	Work Description	Scheduled Value
1	Mobilization	$0.00
2	Demolition	$0.00
3	Preliminary Roof Material	$0.00
4	Preliminary Roof Labor	$0.00
5	Insulation Material	$0.00
6	Insulation Labor	$0.00
7	Roofing Material	$0.00
8	Roofing Labor	$0.00
9	Sheet Metal Material	$0.00
10	Sheet Metal Labor	$0.00
11	Painting	$0.00
12	Mechanical (Plumbing) - Labor and Material	$0.00
13	Electrical (Misc)	$0.00
14	Electrical (Lightning Protection)	$0.00
15	Unit Costs	
15A	2x (blocking/nailers) - cost/lf	$0.00
15B	Decking (wood, metal or concrete) - cost/sf	$0.00
15C	LWIC - cost/sf	$0.00
15D	Etc.	$0.00
16	Alternate No. 1	$0.00
17	Alternate No. 2	$0.00
	TOTALS	$0.00

The above table is included as a suggested format for the development a Schedule of Values. The Schedule of Values is to be submitted for approval using the standard **AIA Document G703 - Continuation Sheet.** Submit in accordance with Section 01330 - SUBMITTALS.

Upon approval, the continuation sheet is to be attached to **AIA Document G702 - Application and Certificate for Payment**, in accordance with Section 01270 - APPLICATION FOR PAYMENT.

PART 1 GENERAL

1.1 SUMMARY

A. Section Includes:
1. Submittals
2. Request For Information (RFI) Format
3. Documentation of change in Contract Sum/Price and Contract Time
4. Change procedures
5. Construction Change Directive
6. Stipulated Sum change order
7. Execution of change orders
8. Correlation of Contractor submittals

B. Related Sections:
1. Agreement: Monetary values of established Unit Prices and percentage allowances for Contractor's overhead and profit.
2. General Conditions: Governing requirements for changes in the Work, in Contract Sum/Price, and Contract Time.
3. Supplementary Conditions: Percentage allowances for Contractor's overhead and profit.
4. Section 01270 - Applications for Payment
5. Section 01330 - Submittals: Schedule of values
6. Section 01600 - Material and Equipment: Product options and substitutions
7. Section 01770 - Contract Closeout: Project record documents

1.2 SUBMITTALS

A. Submit name of the individual authorized to receive change documents and be responsible for informing others in Contractor's employ or Subcontractors of changes to the Work.

1.3 REQUEST FOR INFORMATION (RFI) FORMAT

A. When questions and/or conflicts arise, the Contractor shall submit a copy of the attached **Request for Information** (RFI) **form**. The form is to be prepared by the Contractor or Subcontractor and shall include all relevant information to facilitate a prompt response by the Architect/Engineer. Include a suggested solution when applicable.

B. It is recommended that the RFI be submitted electronically via e-mail as a MicroSoft Word file along with any associated attachments. All RFI's shall be submitted through the Contractor to the Architect/Engineer and the Owner.

C. An electronic copy of the RFI Form as a MicroSoft Word file is available from the Architect upon request.

D. RFI responses are to be retained and become a part of the contract documents.

1.4 DOCUMENTATION OF CHANGE IN CONTRACT SUM/PRICE AND CONTRACT TIME

A. Maintain detailed records of work done on a force account basis. Provide full information required for evaluation of proposed changes, and to substantiate costs of changes in the Work.

B. Document each quotation for a change in cost or time with sufficient data to allow evaluation of the quotation.

C. Provide additional data to support computations:
1. Quantities of products, labor, and equipment.
2. Taxes, insurance, and bonds.
3. Overhead and profit.
4. Justification for any change in Contract Time.
5. Credit for deletions from Contract, similarly documented.

D. Support each claim for additional costs, and for work done on a time and material basis, with additional information:
1. Origin and date of claim.
2. Dates and times work was performed, and by whom.
3. Time records and wage rates paid.
4. Invoices and receipts for products, equipment, and subcontracts, similarly documented.

1.5 CHANGE PROCEDURES

A. Supplemental Instructions: The Architect with Owner approval will advise the Contractor of minor changes in the Work not involving an adjustment to Contract Sum/Price or Contract Time as authorized by AIA A201, 1997 Edition; Paragraph 7.4 or by issuing supplemental instructions on AIA Form G710 – Supplemental Instructions.

B. Request for a Proposal: The Architect may issue a Proposal Request which includes a detailed description of a proposed change with supplementary or revised Drawings and specifications, a change in Contract Time for executing the change the period of time during which the requested price will be considered valid. Contractor will prepare and submit an estimate within 5 days.

C. Request for Change: The Contractor may propose a change by submitting a request for change to the Architect, describing the proposed change and its full effect on the Work, with a statement describing the reason for the change, and the effect on the Contract Sum/Price and Contract Time with full documentation and a statement describing the effect on Work by separate or other contractors. Document any requested substitutions in accordance with Section 01600.

D. Construction Change Directive: The architect may issue a Construction Change Directive signed by the Owner, with supplementary or revised Drawings and Specifications, instructing the Contractor to proceed with a change in the Work, for subsequent inclusion into a Change Order.
   1. The Directive will describe changes in the Work and will designate method of determining any change in Contract Sum or Contract Time.
   2. The Architect will substantiate instructions on AIA G714, “Construction Change Directive”.
   3. Contractor shall promptly execute changes.

E. Stipulated Sum Change Order: Upon recommendation and approval based on Proposal Request and Contractor's fixed price quotation or Contractor's request for a Change Order the Architect will prepare for distribution the change description on AIA G701 – Change Order.

F. Execution of Change Orders: Architect will issue Change Orders for signatures of parties as provided in the Conditions of the Contract.

1.6 CORRELATION OF CONTRACTOR SUBMITTALS

A. Promptly revise Schedule of Values and Application for Payment forms to record each authorized Change Order as a separate line item and adjust the Contract Sum/Price.

B. Promptly revise progress schedules to reflect any change in Contract Time, revise sub-schedules to adjust times for other items of work affected by the change, and resubmit.

C. Promptly enter changes in Project Record Documents.

PART 2 PRODUCTS (Not Used)

PART 3 EXECUTION (Not Used)

END OF SECTION

REQUEST FOR INFORMATION (RFI)

TO: A/R/C Associates, Incorporated
601 N. Fern Creek Avenue, Suite 100
Orlando, Florida 32803

FROM:_____

_____

RFI NO._____	A/R/C PROJECT NO: **20021.00** OWNER'S PROJECT NO: Bid # 2020-35
PROJECT: **First Coast Technical College, Building "B" Roof Replacement**	ISSUE DATE: _____
SUBJECT:	

REQUIRED RESPONSE DATE: _____
DWG NO:_____

REF: SPEC SECTION: _____
ATTACHMENTS:_____

QUESTION:

SUGGESTION: (Include cost or schedule considerations, if any)

RESPONSE DATE:

RESPONSE:

_____

BY

Copies:

PART 1 GENERAL

1.01 RELATED DOCUMENTS

A. The Work of this Section shall be included as a part of the Contract Documents of the Contractor on this Project.

1.02 DESCRIPTION OF WORK

A. This Section specifies administrative and procedural requirements for project meetings, including, but not limited to, the following:
   1. Pre-construction conferences.
   2. Pre-installation conferences.
   3. Progress meetings.

B. The Contractor or awardee shall be required to have present at each of the following project meetings a representative acceptable to the Architect. The designated representative shall have sufficient authority and knowledge to make decisions for the Contractor he is representing on matters affecting this Project.

C. The Contractor or representatives unable to attend a specified meeting shall have an acceptable alternate representative designated or shall notify the Architect not less than 7 days prior to date of meeting.

D. Contractor shall prepare minutes and record significant discussions and agreements and disagreements of each meeting schedule. Meeting minutes shall be initiated by the Contractor and coordinated with the Architect prior to publishing. Promptly distribute the record of the meeting to each party present and to parties who should have been present within 48 hours of completion of meetings.

1.03 PRE-CONSTRUCTION CONFERENCE

A. The purpose of this meeting is to review submittals that will be required by the Contractor and to review the project procedures that are to be followed during the progress of construction.

B. Advance written notice of the pre-construction conference date, time, and place will be sent to the successful bidder by the Architect. Contractor shall require his major subcontractors to attend.

C. Minimum agenda shall be as follows:
   1. Discussion of construction schedule.
   2. Critical work sequencing.
   3. Designation of responsible personnel.

4. Processing of field decisions and Change Orders.
5. Procedures for processing Applications for Payment.
6. Distribution of Contract Documents.
7. Submittal of shop drawings, product data and samples.
8. Procedures for maintaining record documents.
9. Use of premises:
   a. Office and storage areas.
   b. Owner's requirements.
10. Major equipment deliveries and priorities.
11. Safety and first-aid procedures.
12. Security procedures.
13. Housekeeping procedures.
14. Working hours.
15. Review of code compliance requirements (with code officials present and available for questions).

1.04 PRE-INSTALLATION CONFERENCES

A. Conduct a pre-installation conference at the project site before each construction activity that requires coordination with other construction, as outlined in the technical sections.

B. Attendees: The Prime Contractor, installing foreman, and representatives of manufacturers and fabricators involved in or affected by the installation, and its coordination or integration with other materials and installations that have preceded or will follow, shall attend the meeting. The General Contractor shall schedule conferences and advise the Architect of scheduled meeting dates.
   1. Review the progress of other construction activities and preparations for the particular activity under consideration at each pre-installation conference, including requirements for the following:
      a. Contract documents.

C. Discussion Topics:
   1. Related Change Orders.
   2. Purchases.
   3. Deliveries.
   4. Shop drawings, product data, and quality control samples.
   5. Review of mock ups.
   6. Possible conflicts.
   7. Compatibility problems.
   8. Time schedules.
   9. Weather limitations.
   10. Manufacturer’s recommendations.
   11. Warranty requirements.

12. Compatibility of materials.
13. Acceptability of substrates.
14. Temporary facilities.
15. Space and access limitations.
16. Governing regulations.
17. Safety.
18. Inspecting and testing requirements.
19. Required performance results.
20. Recording requirements.
21. Protection.
    a. Do not proceed with the installation if the conference cannot be successfully concluded. Initiate whatever actions are necessary to resolve impediments to performance of Work and reconvene the conference at the earliest feasible date.
22. Contractors shall review and comply with required pre-installation conferences outlined in the Contract Documents. (See individual Specification Sections.)

1.05 PROGRESS MEETINGS

A. Progress meetings will be established on a weekly or biweekly basis, or more frequent as determined by the Architect, to review the progress of construction, possible delays, problems, and projected construction activity. The Contractor is required to attend progress meetings. Contractor failing to be represented at project meetings, when specifically requested, will be taken into consideration when payment applications are being considered for approval by the Architect/Engineer.
   1. Notice of said meetings will originate in the office of the Architect.
   2. Contractor shall require his principal subcontractors to attend.
   3. The progress and schedule of each involved Contractor shall be coordinated at this meeting. The representative of the Contractor present shall have the authority to change the Contractor's work schedule or authorize work with the consent of the Architect. If the Contractor fails to attend this meeting, it shall be his responsibility to obtain the information discussed at the meeting. Meeting notes and the most current construction schedule will be in the office of the Architect and Contractor. Attendance at these meetings is required for Contractor's payments.
   4. Coordinate dates of meetings with preparation of payment requests.

B. Minimum Agenda shall be as follows:
   1. Review work progress since last meeting.
   2. Note field observations, problems, and decisions.
   3. Identify problems which impede planned progress.
   4. Review off-site fabrication problems.
   5. Develop corrective measure and procedures to regain planned schedule.
   6. Revise construction schedule as indicated.

7. Plan progress during next work period.
8. Review submittal schedules, expedite as required to maintain schedule.
9. Maintaining of quality and work standards.
10. Review changes proposed by Owner for effect on construction schedule and effect on completion schedule.
11. Complete other current business.
12. Documentation of information for payment requests.

PART 2 PRODUCTS (Not Applicable)

PART 3 EXECUTION (Not Applicable)

END OF SECTION

PART 1 GENERAL

1.01 RELATED DOCUMENTS

A. The Work of this Section shall be included as a part of the Contract Documents of each Contractor on this Project. Where such Work applies to only one Contractor, it shall be defined as to which Contractor the Work belongs.

1.02 SUMMARY

A. This Section includes administrative and procedural requirements for schedules and reports required for proper performance of the Work, including:
1. Preliminary construction schedule
2. Contractor's construction schedule
3. Submittal schedule
4. List of subcontractors, suppliers, and manufacturers
5. Use of site plan

1.03 PRELIMINARY CONSTRUCTION SCHEDULE

A. Pursuant to paragraph 4.11 of the General Conditions of this contract, the Contractor shall, within fourteen (14) calendar days following receipt of the Notice of Award, submit to the Owner an Interim Project Construction Schedule, in Critical path Method format (or CPM), for his construction/erection scope of work for the first 90 days of the Project, Microsoft Project. The schedule shall consist of a network diagram with activity descriptions and durations and supporting data that will explain the Contractor’s planning of the work and provide cost allocation and resource estimates for each activity. The Owner will review the Contractor’s Preliminary Project Construction Schedule to determine if it meets the specific requirements of Article 4, TIME OF COMMENCEMENT AND COMPLETION of the Owner/Contractor Agreement.

1.04 CONSTRUCTION SCHEDULES

A. Schedule:
1. Pursuant to paragraph 4.11 of the General Conditions of this contract, the following additional scheduling requirements are a part of this Contract.

2. Work under this Section shall consist of furnishing a Construction Schedule showing in detail how the Contractor plans to execute and coordinate the Work. The Contract Schedule shall be based on and incorporate the Contract Milestone and Completion Dates specified in the Owner-Contractor Agreement and shall show the order in which Contractor shall perform the Work, projected dates for the start and completion of separable portions of the work, and any other information concerning Contractor's Work scheduling as Owner may request. The proposed Construction Schedule and related Schedule of Values must be submitted to the Design Consultant, Construction Program Manager and Owner prior to commencement of the work.

3. The Construction Schedule shall be in the Critical Path Method Format (CPM) bar chart, submitted to the Owner on a computer disc in Primavera Sure Trak format. The schedule shall consist of a network diagram with activity descriptions and durations and supporting data that will explain the Contractor's planning of the work and provide cost allocation and resource estimates for each activity. Each pay item designed in the Contractor's Schedule of Values shall be denominated as a separate activity and represented by a horizontal bar or bars on the chart. The time-scale shall indicate all required Milestone and Completion Dates as set forth in the Owner-Contractor Agreement. The horizontal bar(s) shall indicate the start and finish dates as well as the total time period of performance for each pay item activity. The Contractor shall arrange the chart so as to show the pay item activities when are necessary to fulfill each and every Milestone and Completion Date requirement.

4. Each Work item on the bar chart, as well as being correlated to the payment document, shall be broken into reasonable work segments/activities (where practicable) with individual starting and stopping dates. As a minimum, work shall be segmented to demonstrate its relationship to the various Milestone Dates, if any. The segmented Work activities shall be cost loaded to show their dollar value as part of the entire pay item. Activity titles shall be self-explanatory; abbreviations shall be shown in the legend.

5. If the Contractor should desire or intend to complete the work earlier than any required Milestone or Completion date, the Owner or the Construction Program Manager shall not be liable to the Contractor for any costs or other damages should the contractor be unable to complete the Work before such Milestone or Completion date. The duties, obligations and warranties of the Owner to the Contractor shall be consistent with and applicable only to the completion of the Work on the Milestone and completion dates required in the Owner-Contractor Agreement, unless Owner, the Construction Program Manager and Contractor otherwise agree in a written Change Order.

6. The network diagram shall show:
   a. The order and interdependencies of the Contractors activities and the major points of interface or interrelation with the activities of others, including Specific Dates for completion.
   b. Conformance with an identification of the specified mandatory Milestone dates specified in the Contract Documents.
   c. The description and quantity of work by activity.
   d. For all equipment and materials fabricated or supplied for this Project, the network shall show a sequence of activities including:
      (a) Procurement
      (b) Engineering and Preparation of Submittals
      (c) Approval of Submittals
      (d) Fabrication / Manufacturing
      (e) Delivery
      (f) Erection / Installation
   e. Delivery of Owner-Furnished Materials/Equipment

f. Critical Path (or Paths)
g. Training of Owner Personnel on equipment.

B. Updates and Revisions:

1. The chart shall be updated to show actual progress and the effect of modifications, delays and other events. A second bar for each work item, in a contrasting color or pattern, shall be drawn parallel to the proposed schedule to show actual progress and to forecast future progress. The actual start and stop dates shall be entered, as well as the actual dates of the Milestone events. Updates are to be submitted monthly to the Construction Program Manager with, and as part of, each payment request.

2. The updated Construction Schedule submitted by Contractor shall not show a completion date later than the Contract Time, subject to any time extensions approved by Owner; provided, however, that if Contractor believes he is entitled to an extension of the Contract under the Contract Documents, Contractor shall submit to the Construction Program Manager, with each update, a separate schedule analysis (entitled "Requested Time Adjustment Schedule") indicating suggested adjustments in the Contract Time which should, in the opinion of the Contractor, be made by time extension, due to changes, delays or conditions occurring during the past month or previously, or which are expected or contemplated by Contractor (whether such conditions are excusable under the Contract or are allegedly due to Contractor or Owner fault); this separate schedule, if submitted, shall be accompanied or preceded by a formal time extension request as required by the Contract Documents and a detailed narrative justifying the time extension requested. To the extent any time extension requests are pending at the time of any update in the Construction Schedule, the "Requested Time Adjustment Schedule" shall be updated also each month, to reflect any adjustments made by Contractor in the Construction Schedule, or any time extensions previously granted by Owner, and to reflect actual or expected progress. Neither the Construction Program Manager nor the Owner shall have any obligation to consider any time extension request unless the requirements of the Contract Documents, and specifically, but not limited to, the requirements set forth in this paragraph, are complied with; and neither the Construction Program Manager nor the Owner shall not be responsible or liable to Contractor for any constructive acceleration due to failure of Owner to grant time extensions under the Contract Documents should Contractor fail to substantially comply with the submission requirements and the justification requirements of this Contractor for time extension requests. Contractor's failure to perform in accordance with the Construction Schedule shall not be excused, nor be chargeable to Owner, the Construction Program Manager nor the Design Consultant, because Contractor has submitted time extension requests or the "Requested Time Adjustment Schedule."

3. Neither the updating of Contractor's work schedule nor the submission, updating, change or revision of any other report or schedule submitted to Owner by Contractor under this Contractor nor review or non objection of the Owner or Construction Program Manager of any such report or schedule shall have the effect of amending or modifying, in any way, the Contract Completion Date, Milestone Dates or of modifying or limiting in any way Contractor's obligations under this Contract.

4. All of Contractor's detailed calculations and documents supporting all schedules, reports, and forecasts shall be available to Owner and the Construction Program Manager on request.

5. Each updated Construction Schedule submitted by contractor to the Construction Program Manager shall be accompanied by a narrative report which reflects the following:
   a. Description of Work accomplished since submission of previous progress schedule;
   b. Comparison of the actual status of the Work with Contractor's project schedule;
   c. Status of equipment and material deliveries;
   d. Personnel staffing schedule;
   e. Causes of any delays;
   f. Revision of schedules;
   g. Action proposed to restore schedule.

6. Pursuant to paragraph 4.12 of the General Conditions, should any of the conditions listed in paragraph 4.10.3 exist such that certain activities shown on the Contractor's Construction Schedule fall behind schedule to the extent that any of the mandatory specific or milestone dates or completion dates are in jeopardy, the Contractor shall be required to, at no extra cost to the Owner, prepare and submit to the Construction Program Manager a supplementary Recovery Schedule, in a form and detail appropriate to the need, to explain and display how he intends to reschedule those activities to regain compliance with the Construction Schedule during the immediate subsequent pay period.

C. Submittal Schedule:

1. Concurrent with the development and acceptance of the Construction Schedule, prepare a complete schedule of submittals. Submit the schedule within 10 days of the date required for submittal of the Construction Schedule.
   a. Coordinate Submittal Schedule with the list of subcontracts, Schedule of Values, and the list of products as well as the Construction Schedule.
      (a) Prepare the schedule in chronological order. Provide the following information:
      (b) Scheduled date for the first submittal.
      (c) Related Section number.
      (d) Submittal category (Shop Drawings, Product Data, or Samples).
      (e) Name of the Subcontractor.

(f) Description of the part of the Work covered.
(g) Scheduled date for resubmittal.
(h) Scheduled date for the Architect's final release or approval.

2. Distribution: Following response to the initial submittal, print and distribute copies to the Construction Program Manager, Architect, Owner, subcontractors, and other parties required to comply with submittal dates indicated.

3. When revisions are made, distribute to the same parties and post in the same locations. Delete parties from distribution when they have completed their assigned portion of the Work and are no longer involved in construction activities.

D. Schedule of Off-Site Activities:

1. The contractor shall include in his Construction Schedule all procurements related activities which lead to the delivery of materials to the site in a timely manner. Upon written approval by the Owner, these activities may be submitted as a separate Off-Site Activities Schedule, properly correlated to the Construction Schedule. The schedule of off-site activities shall include, but is not limited to, the following:
   a. Dates for submittals, ordering, manufacturing, or fabricating and delivery of equipment and materials. Long lead items requiring more than one month between ordering and delivery to site shall be clearly noted;
   b. All significant activities to be performed by the Contractor during the fabrication and erection/ installation in a Contractor's plant or on a job site, including materials/equipment purchasing, delivery; and
   c. Contractor's drawings and submittals to be prepared and submitted through the Construction Program Manager to the Owner or Design Consultant for approval.

2. The Contractor shall be solely responsible for expediting the delivery of all materials to be furnished by him so that the construction progress shall be maintained according to the current schedule for the Work as approved by the Construction Program Manager.

3. The Construction Program Manager shall be advised in writing by the Contractor wherever it is anticipated or determined by the Contractor that the delivery date of any material and/or equipment furnished by the Contractor for installation will be later than the delivery dates shown on the schedule, subject to schedule updates.

4. Submittals, equipment orders and similar items are to be treated as schedule activities.

E. Float Time:

1. Float or slack time is defined as the amount of time between the earliest start date and the latest start date or between the earliest finish date and the latest finish date of an activity on the Construction. Float or slack time is for the exclusive use and benefit of the Owner. The Contractor acknowledges and agrees that actual delays, affecting activities containing float time, will not have any affect upon contract completion times, providing that the actual delay does not exceed the float time associated with those activities.

2. Extensions of time for performance as described in the Contract Documents will be granted only to the extent that time adjustment for the activity or activities affected by any condition or event which entitles the Contractor to a time extension exceed the total float or slack of the affected activity at the time of issuance of a Change Order or the commencement of any delay or condition for which an adjustment is warranted under the Contract Documents.

1.05 LIST OF SUBCONTRACTORS, SUPPLIERS, AND MANUFACTURERS

A. Contractor shall submit a list of subcontractors participating on this Project. Contractor shall submit a complete list of all Subcontractors to Owner immediately upon notice of apparent low Bidder status and prior to award of the Contract. The list shall be complete with names, street addresses, city, state, and zip code. Owner shall consider such matters as it deems fit as to each Subcontractor and how, if at all, it impacts on Contractor's responsibility, fitness or ability to perform this Contract and on Bidder's overall responsibility.

B. Contractor shall submit a list of suppliers and manufacturers furnishing and installing materials and products specified on this Project. List shall be submitted within 15 days of Notice to Award. List shall be complete including manufacturers and model numbers of equipment on which the bid is based on.

1. Items shall be taken from those named in the Contract Documents.
2. The proprietary name first listed, where more than one manufacturer is listed, shall be interpreted as the specified item.
3. If the Contractor fails to submit the list of materials and products within 60 days, the proprietary name first listed, where more than one manufacturer is listed, shall be interpreted as the only specified item. Products submitted other than the specified item will be rejected or treated as change orders.

1.06 COORDINATION

A. The Contractor shall coordinate his work with that of other contractors and shall cooperate fully with the Construction Program Manager in maintaining orderly progress toward completion of the work as scheduled. The Construction Program Manager's decisions regarding priority between the Contractor's work and the work of other contractors at the site shall be final and shall not be cause for extra compensation or extension of time, except where extension of time is granted because of a delay for which Contractor is otherwise entitled to an extension of time under the Contract Documents.

B. The milestone dates referred to in the Contract Documents for delivery of Owner-furnished equipment and materials and interface activities of other contractors on the site are based on dates set forth in separate contracts with the Owner and represent the information available at this time.

C. Failure of Owner-furnished equipment and materials to arrive as scheduled, or failure of other construction contractors to meet their schedule, shall not be justification for an extension of time, except where such failure causes, in the opinion of the Construction Program Manager and Design Consultant, an unreasonable delay in the Contractor's work, in which case the provisions of the General Conditions regarding extensions of time and extra work shall apply.

D. The Contractor shall keep himself, and his subcontractors, advised at all times during the course of the Work regarding delivery status of Owner-furnished equipment and materials and of the progress of construction work being performed under separate contracts.

1.07 CONTRACTOR COVENANTS AND GUARANTEES

A. Contractor covenants and guarantees that Contractor will not:

1. Misrepresent to Owner, Design Consultant or Construction Program Manager its planning scheduling or execution of the Work;

2. Utilize schedules materially different from those provided by Contractor to the Owner or Construction Program Manager.

3. Prepare schedules, updates, revisions or reports for the work which do not accurately reflect the actual intent or reasonable and actual expectations of Contractor and its Subcontractors as to:
   a. The sequences of activities,
   b. The duration of activities,
   c. The responsibility of activities,
   d. Resources availability,
   e. Labor availability or efficiency,
   f. Foreseeable weather conditions,
   g. The value associated with the activity,
   h. The percentage complete of any activity,
   i. Completion of any item of work or activity,
   j. Project milestone completion,
   k. Delays, slippages, or problems encountered or expected,
   l. Subcontractor requests for time extensions or delay claims of subcontractors, and
   m. If applicable, the float time available.

B. Contractor's failure to substantially comply with the foregoing covenant and guarantee shall be a substantial and material breach of contract which will permit Owner to terminate Contract for default, or withhold payments under the Contract Documents, and shall entitle Owner to the damages afforded for misrepresentation or fraud by these Contract documents or applicable law.

C. Should Contractor fail to substantially comply with the provisions of the Contract documents relating to planning, scheduling and execution of the Work by the overall project schedule, Owner and the Construction Program Manager shall have the right, at their option, to retain the services of scheduling consultants or experts (including attorneys if necessary in their opinion) to prepare a schedule in accordance with the Contract Documents and to review and analyze same, in order to allow Owner and Construction Program Manager to evaluate the program of the Work by Contractor, to determine whether Contractor is substantially complying with the contract Documents, and to direct such action on the part of the contractor, as permitted by the Contract Documents, as required to ensure, under the owner's schedule prepared hereunder, that Contractor will comply with such schedule. All costs (including attorneys' fees) incurred by Owner or Construction Program Manager in preparing the schedule hereunder shall be charged to Contractor's account or deducted from retainage. If contractor fails to substantially comply with the scheduling and execution of the work requirements of the Contract Documents, Contractor hereby agrees, in such instance, to comply with such schedules, as the Construction Program Manager develops, or directions, and activity sequences and durations as the Construction Program Manager may reasonably require, without additional cost to the Owner (subject only to cost adjustments for such changes in the Work as the Owner may direct by written change order), to ensure completion within the Contract Time.

D. Default - Failure of the Contractor to substantially comply with the requirements of this Section shall constitute reason that the Contractor is failing to prosecute the Work with such diligence as will insure its completion within the Contract times and shall be considered grounds for termination by the Owner, pursuant to subparagraph 14.3.1.1 of the General Conditions.

1.08 PROJECT USE SITE PLAN

A. The Contractor, in cooperation with subcontractors on this Project, shall prepare a proposed project use of the site plan.

B. Contractor shall confine operations at the site to areas within the areas indicated and as approved on the use of the site plan, and as permitted by law, ordinances, and permits. Site shall not be unreasonably encumbered with materials, products, or construction equipment.

C. The Contractor in reviewing his use of the site shall include access to proposed building for construction purposes, storage of materials and products, parking, where possible, for employees, temporary facilities including offices, storage, and workshop sheds or portable trailers, and unloading space.

D. Where a temporary fence is to be provided, the Contractor shall show any additional area needed in the Contractor's use of the site beyond that which may be indicated on the Drawings. Where additional fencing is required, such fencing shall be included at no additional cost to the Owner.

E. The Contractor will indicate to the subcontractor after award of Contract which portions of the site can be used for construction activities. Damage to any existing paved or unpaved areas shall be paid for by the Contractor responsible for damage.

PART 2 PRODUCTS (Not Applicable)

PART 3 EXECUTION (Not Applicable)

END OF SECTION

PART 1 GENERAL

1.01 RELATED DOCUMENTS

A. The Work of this Section shall be included as a part of the Contract Documents of each Contractor and subcontractor on this Project.

1.02 SUMMARY

A. This Section includes administrative and procedural requirements for submittals required for performance of the Work, including the following:
   1. Shop drawings.
   2. Product data.
   3. Samples.

1.03 SUBMITTAL PROCEDURE

A. Submittals are to be submitted directly to the Architect.

B. Each individual submittal item or material shall include a “SUBMITTAL COVER FORM” as attached at the end of this Section to allow reviewer to respond to each individual item in lieu of a group of items or materials.

C. Number the submittal in the accordance with the “SUBMITTAL RECORD” included at the end of this section. e.g., (Section)-(Category No.)-(Item No.); 07536-100-1.

D. Subcontractors on this Project shall provide submittals in accordance with the requirements of this Section. Where a submittal is required by a Subcontractor but assistance needed from others, the Prime Contractor shall participate and coordinate the submittal.

E. Where submission of samples, shop drawings, or other items are required from suppliers or subcontractors, it shall be the responsibility of the Prime Contractor to see that the submittal items required are complete and properly submitted, and corrected and resubmitted at the time and in the order required so as not to delay the progress of the Work. Submittals shall be made through the Prime Contractor.

F. The Prime Contractor shall check shop drawings, samples, and other submittals and submit them to the Architect with a “SUBMITTAL COVER FORM” for each submittal giving his approval, comments, and suggestions. Each transmittal shall include the following information on the SUBMITTAL COVER FORM”:
   1. Date submitted.
   2. Project title and number.
   3. Contractor's name and address.

4. Identification by Specification Section and quantity submitted for each submittal including name of subcontractors, manufacturer, or supplier.
5. Notification of deviations from the Contract Documents for each submittal.
6. Contractor's written approval marked on each submittal.

G. The Prime Contractor shall prepare, review, and stamp with his approval and submit, the submittals required by these Contract Documents ten (10) days prior to the project preconstruction conference. It is the intent that most necessary approvals will have been completed by that time.

H. The Architect shall review and take action on submittals with reasonable promptness, so as to cause no delay in the progress. A reasonable period of time in accordance with approved project schedule for review of and action taken on submittals shall be as specified herein, but in no case shall it be less than ten (10) calendar days from the time it is received by the Architect until the time the submittal is marked and forwarded or returned. Prime Contractor shall allow sufficient mailing time for submittals.

1.04 SHOP DRAWINGS

A. The Prime Contractor shall perform no portion of the Work requiring submittal and review of shop drawings, product data, samples or similar submittals until the respective submittal has been approved by the Architect. Such Work shall be in accordance with approved submittals.

B. Submit newly prepared information drawn accurately to scale. Highlight, encircle, or otherwise indicate deviations from the Contract Documents. Do not reproduce Contract Documents or copy standard information as the basis of Shop Drawings. Standard information prepared without specific reference to the Project is not a Shop Drawing.
1. AutoCAD Drawings: Copies of contract drawings may be available from the Architect upon request to use for submittals, (such as the roof plan for the rigid insulation layout). Contractors requiring this service must contact the Architect to verify availability and will be required to complete an authorization to use copyrighted material and waiver of liability form.

C. Shop drawings are drawings, diagrams, illustrations, schedules, performance charts, brochures, and other data which are prepared by the Contractor or subcontractor, manufacturer, supplier, or distributor to illustrate some portion of the Work.
1. Advertising brochures will not be accepted as shop drawings.
2. Erection and setting drawings as referred to in these Specifications will be considered as shop drawings and shall be submitted along with detailed shop drawings.
3. Where schedules are required to indicate locations, they shall be submitted as part of the shop drawings package for that item.
4. Shop drawings and schedules shall repeat the identification shown on the Contract Drawings.

5. Include the following information:
   a. Dimensions.
   b. Identification of products and materials included by sheet and detail number.
   c. Compliance with specified standards.
   d. Notation of coordination requirements.
   e. Notation of dimensions established by field measurements.

D. Preparation of Submittals: Provide permanent marking on each submittal to identify project, date, Contractor, Subcontractor, submittal name, and similar information to distinguish it from other submittals. Show Contractor's executed review and approval marking and provide space for Architect's "action" marking. Package each submittal appropriately for transmittal and handling. Submittals which are received from sources other than through the Contractor will be returned "without action."

E. By approving and submitting shop drawings, the Prime Contractor thereby represents that he has determined and verified field measurements, field construction criteria, materials, catalog numbers, and similar data, and that he has checked and coordinated each shop drawing with the requirements of the Work and of the Contract Documents prior to submitting to the Architect. Submittals which are received from sources other than through the Prime Contractor will be returned without review, requiring resubmittal.

F. The Prime Contractor shall have corrections required by the Architect made and shall resubmit the required number of corrected copies of shop drawings until appropriately marked. The Prime Contractor shall direct specific attention in writing or on resubmitted shop drawings to revisions other than the corrections requested by the Architect on previous submissions.

G. The Architect will review shop drawings only for conformance with the design concept of the Project and with the information given in the Contract Documents. The Architect's review of a separate item shall not indicate review of an assembly in which the item functions.
   1. Only shop drawings, product data, and samples marked "No Exceptions Taken" or "Note Markings/Confirm" shall be considered "final" and used in conjunction with the work of this Project.

H. The Architect's review of shop drawings shall not relieve the Prime Contractor of responsibility for any deviation from the requirements of the Contract Documents unless the Prime Contractor has informed the Architect in writing of such deviation at the time of submission and the Architect has given written approval to the specific deviation, nor shall the Architect's action relieve the Prime Contractor from responsibility for errors or omissions in the shop drawings.
   1. The Architect's review of such submittals is not conducted for the purpose of determining the accuracy and completeness of other details such as dimensions and qualities, or for substantiating instructions or performance of equipment or systems, all of which remain the responsibility of the Prime Contractor as required

by the Contract Documents. The Architect's review shall not constitute approval of safety precautions or, unless otherwise specifically stated by the Architect, of any construction means, methods, techniques, sequences, or procedures. The Architects approval of a specific item shall not indicate approval of an assembly of which it is a component.

I. Notations and remarks added to shop drawings by the Architect are to ensure compliance to Drawings and Specifications and do not imply a requested or approved change to contract cost.

J. Should deviations, discrepancies, or conflicts between shop drawings and the Contract Documents (Contract Drawings and Specifications) be discovered, either prior to or after review, the Contract Documents shall control and be followed.

K. All shop drawings and product data submittals made for this project are to be submitted to the Architect / Engineer's office as digital files for review, either via email or a file sharing service, (Dropbox, Box, etc.). Follow this same procedure if resubmittals are required.

L. Shop drawings not requested by the Architect / Engineer shall be returned without action.

M. Shop drawings will be marked as follows: Prime Contractor shall take the following action for each respective marking:

1. "**NO EXCEPTIONS TAKEN"** – **APP** (approved) - Copies will be distributed as indicated in accordance with the above schedule.
2. "**NOTE MARKINGS/CONFIRM**" – **A/C** (approved with comments and/or corrections) - Final but Restricted Release; Prime Contractor may proceed with fabrication, taking into account the necessary corrections on submittal and with Contract Documents. Prime Contractor must submit a confirmation letter to remove restriction and allow shop drawings on the project site. A sample of a confirmation letter is enclosed herein.
3. "**NOTE MARKINGS/RESUBMIT**" – **R/R** (revise and resubmit) - Prime Contractor may proceed with fabrication, taking into account the necessary corrections. Corrected shop drawings shall be resubmitted before fabrication of this work is complete to obtain a different action marking. Do not allow drawings marked "Resubmit" to be used in connection with installation of the Work.
4. "**REJECTED/RESUBMIT**" **- REJ** (rejected, not in compliance, resubmit) - Prime Contractor will be required to resubmit shop drawings in their entirety. No fabrication or installation shall be started until shop drawings so marked have been completely revised, resubmitted, and marked by Architect according to preceding Paragraphs a. or b.

N. Upon review, the Architect / Engineer's office will issue the shop drawings as digital files either via email or a link to a file sharing service, (Dropbox, Box, etc.), will be provided to the following parties:
   1. Owner and/or Owner's representative.
   2. Prime Contractor. Distribution to any supplier / subcontractor is the responsibility of the prime contractor.
   3. Architect / Engineer's office records and field files.

1.05 PRODUCT DATA

A. Collect Product Data into a single submittal for each element of construction or system. Product data includes printed information, such as manufacturer's installation instructions, catalog cuts, standard color charts, roughing-in diagrams and templates, standard wiring diagrams, and performance curves.
   1. Mark each copy to show applicable choices and options. Where printed Product Data includes information on several products that are not required, mark copies to indicate the applicable information. Include the following information.
      a. Manufacturer's printed recommendations.
      b. Compliance with trade association standards.
      c. Compliance with recognized testing agency standards.
      d. Application of testing agency labels and seals.
      e. Notation of dimensions verified by field measurement.
      f. Notation of coordination requirements.
   2. Do not submit Product Data until compliance with requirements of the Contract Documents has been confirmed.
      a. Preliminary Submittal: Submit a preliminary single copy of Product Data where selection of options is required.
   3. Submittals: Submit Product Data in accordance with Article 1.04 / K above. The Architect will return the reviewed .pdf files with appropriate comments indicating action taken and corrections or modifications required.
      a. Unless noncompliance with Contract Document provisions is observed, the submittal may serve as the final submittal.
   4. Distribution: Furnish copies of final submittal to installers, subcontractors, suppliers, manufacturers, fabricators, and others required for performance of construction activities. Show distribution on transmittal forms.
      a. Do not proceed with installation until a copy of Product Data is in the Installer's possession.
      b. Do not permit use of unmarked copies of Product Data in connection with construction.

B. MSDS (Material Safety Data Sheets)
   1. In compliance with the OSHA Hazard Communication Standard (1910.1200, 08-24-1987) Contractors shall post at the site MSDS (Material Safety Data Sheets) for <u>ALL</u> products classified as hazardous that their firm has knowledge that they will be furnishing, using, or storing on the jobsite during the duration of this Project in accordance with OSHA standards. At the completion of the project, the

Contractor shall turn their "MSDS" information directly over to the Owner with a receipt for the Owner to sign. A copy of the signed receipt only shall be submitted to the Architect.

2. Submit MSDS (Material Safety Data Sheets) separately from Product Data and Shop Drawing information.

1.06 SAMPLES

A. The Contractor shall submit to the Architect three (3) samples to illustrate materials or workmanship, colors, and textures, and establish standards by which the Work will be judged.

1. Submit full size, fully fabricated samples cured and finished as specified and physically identical with the material or product proposed. Samples include partial sections of manufactured or fabricated components, cuts or containers of materials, color range sets, and swatches showing color, texture, and pattern.

a. Mount or display samples in the manner to facilitate review of qualities indicated. Prepare samples to match the Architect's sample. Include the following:

1) Specification Section number and reference.
2) Generic description of the sample.
3) Sample source.
4) Product name or name of the manufacturer.
5) Compliance with recognized standards.
6) Availability and delivery time.

b. Submit samples for review of size, kind, color, pattern, and texture. Submit samples for a final check of these characteristics with other elements and a comparison of these characteristics between the final submittal and the actual component as delivered and installed.

1) Where variation in color, pattern, texture, and other characteristic is inherent in the material or product represented, submit at least three (3) multiple units that show approximate limits of the variations.
2) Refer to other Specification Sections for requirements for samples that illustrate workmanship, fabrication techniques, details of assembly, connections, operation, and similar construction characteristics.

B. By approving and submitting samples, the Contractor thereby represents that he has determined and verified materials, catalog numbers, and similar data, and that he has checked and coordinated each sample with the requirements of the Work and of the Contract Documents prior to submitting to the Architect.

C. The Contractor shall resubmit the required number of correct or new samples until approved. The Contractor shall direct specific attention in writing or on resubmitted samples to revisions other than the changes requested by the Architect on previous submissions.

D. The Architect will review samples but only for conformance with the design concept of the Project and with the information given in the Contract Documents. The Architect's review of a separate item shall not indicate approval of an assembly in which the item functions.

E. The Architect's action shall not relieve the Contractor of responsibility for deviations from the requirements of the Contract Documents unless the Contractor has informed the Architect in writing of the deviation at the time of submission and the Architect has given written approval to the specific deviation, nor shall the Architect's action relieve the Contractor from responsibility for errors or omissions in the samples.

F. Unless otherwise specified, three (3) samples shall be submitted of adequate size to show function, equality, type, color, range, finish, and texture of material. When requested full technical information and certified test data shall be supplied.
   1. Each sample shall be labeled, bearing material name and quality, the Contractor's name, date, project name, and other pertinent data.
   2. Transportation charges to and from the Architect's office must be prepaid on samples forwarded. Samples shall be retained by the Architect until the Work for which they were submitted has been accepted.

G. Materials shall not be ordered until final review is received in writing from the Architect. Materials shall be furnished, equal in every respect to reviewed samples. Where color or shade cannot be guaranteed, the maximum deviation shall be indicated by the manufacturer. Work shall be in accordance with the final reviewed samples.

PART 2 PRODUCTS (Not Applicable)

PART 3 EXECUTION (Not Applicable)

END OF SECTION

Attachments to Section 01330:

SUBMITTAL COVER FORM.
(1.03 B.)

A copy of the SUBMITTAL COVER FORM shall be attached to each submittal copy with completed information.

SUBMITTAL RECORD (checklist/log)
(1.03 C.)

The attached SUBMITTAL RECORD is intended to assist the contractor in organizing and referencing submittal documents. The attempt was made to make the list as complete as possible; however, additional submittals not included on the list may be required.

SAMPLE OF CONFIRMATION LETTER
(1.04 M.2.)

The Contractor must submit a "confirmation letter" to remove restrictions on a specific submittal and to allow shop drawings and/or product data onto the project site.

SUBMITTAL COVER FORM

SUBMITTAL NO.	A/R/C PROJECT NO: 20021.00

A/R/C Associates Incorporated

PROJECT: First Coast Technical College -Roof Replacement Building B

OWNER'S PROJECT NO: Bid # 2020-35

ITEM:	DATE:

SPEC. SECTION: _____ PARAGRAPH NO: _____

PRIME CONTRACTOR:

CHECKED AND APPROVED FOR SUBMISSION BY:_____ DATE:

SUB-CONTRACTOR: _____ MANUFACTURER: _____

(RESERVE THE SPACE BELOW FOR COMMENTS OR DATE & SHOP DRAWING REVIEW STAMPS)

COMMENTS / REVIEW STAMPS	SUBMITTAL REVIEW BY A/R/C ASSOCIATES, INCORPORATED
	Date: _____ By: _____ **NO EXCEPTIONS TAKEN – APP** ( ) (Approved) **NOTE MARKINGS / CONFIRM – A/C** ( ) (Approved with Comments) If checked above, fabrication MAY be undertaken. Approval does not authorize changes in contract Sum unless stated in separate letter or Change Order. If checked below, fabrication MAY NOT be undertaken. Resubmit corrected copies for final approval. Correction shall be limited to items marked. **NOTE MARKINGS / RESUBMIT – R/R** ( ) (Revise and Resubmit) **REJECTED / RESUBMIT - REJ** ( ) Reviewing is only for conformance with the design concept of the Project and compliance with the information given in the Contract Documents. The contractor is responsible for dimensions to be confirmed and correlated at the site; for information that pertains solely to the fabrication processes or to the means, methods, techniques, sequences and procedures of construction; and for coordination of the Work of all trades.

If Substitution, submittal shall include information required by the General Conditions and Project Specifications

THIS PAGE SHALL BE ATTACHED TO EACH COPY OF EACH SUBMITTAL

A/R/C Associates, Incorporated

601 North Fern Creek Avenue
Suite 100
Orlando, Florida 32803
(407) 896-7875 FAX (407) 898-6043

SUBMITTAL RECORD
(checklist / log)

Action Code **APP** - Approved **A/C** - Approved with Comments **R/R** - Revise and Re-submit **REJ** - Not Approved

The Submittal Checklist/Log represents the minimum submittal requirements for this project. The Contractor may submit any additional information beyond what is requested for review. If there is an item on the Checklist that does not apply to the project do not submit it.

PROJECT:	**First Coast Technical College**	Architect's Project No.	**20021.00**
	Building B	**Notice to proceed issued:**	**Substantial Completion Date:**
CONTRACTOR:			

Spec. Section	Submittal No.		Title/Description	Date Rec'vd	No. of Copies Rec'vd	ACTION	Date Returned	Comments
00500			**Agreement Forms**					
	001		Agreement: (Copies only)					
		-1	Agreement Form:					
		-2	Purchase Order					
00600			**Bonds and Certificates**					
	001		Bonds and Certificates: (Copies only)					
		-1	Bid Bond					
		-2	Performance Bond					
		-3	Labor and Materials Payment Bond					
		-4	Certificate of Liability Insurance					
01110			**Summary of Work**					
	001		Reports:					
		-1	Rain Day Report (Required for Project Closeout)					**Submit Updated Report with each Payment Application**
		-2	Interior Inspection Report (Photo/Video Record Supplement)					
		-3	Exterior Inspection Report (Photo/Video Record Supplement)					
01330			**Submittals**					
	001		Schedules:					
		-1	Construction Progress Schedule					
		-2	Schedule of Values					
01600			**Product Substitution Requirements**					
	001		Product Substitution					
		-1	Product Substitution Request Form/Product Information Form					
01770			**Project Closeout**					
	001		Project Completion Forms					**Submit at Closeout**
		-1	Written Request for Substantial Inspection					
		-2	Certificate of Substantial Completion - AIA Document G704					**Issued by Architect**
		-3	Contractor's Certification of Project Completion or Owner's Certificate of Final Completion/Inspection					**Issued by Architect**
	002		Final Submittals					
		-1	Record Documents					**Submit at Closeout**
			Drawings (As-builts)					
			Specifications					
			Addenda					
			Change Orders and Other Modifications					
			Submittals (Shop Drawings, Product Data and Samples)					
			Manufactures instruction for Assembly, Installation and Adjusting					

A/R/C Associates, Incorporated

601 North Fern Creek Avenue
Suite 100
Orlando, Florida 32803
(407) 896-7875 FAX (407) 898-6043

SUBMITTAL RECORD
(checklist / log)

Action Code **APP** - Approved **A/C** - Approved with Comments **R/R** - Revise and Re-submit **REJ** - Not Approved

The Submittal Checklist/Log represents the minimum submittal requirements for this project. The Contractor may submit any additional information beyond what is requested for review. If there is an item on the Checklist that does not apply to the project do not submit it.

PROJECT:	**First Coast Technical College**	Architect's Project No.	**20021.00**
	Building B	**Notice to proceed issued:**	**Substantial Completion Date:**
CONTRACTOR:			

Spec. Section	Submittal No.		Title/Description	Date Rec'vd	No. of Copies Rec'vd	ACTION	Date Returned	Comments
		-2	Operation and Maintenance Documents					**Submit at Closeout**
		-3	Warranties					**Submit at Closeout**
		-4	Spare Parts and Maintenance Materials					**Submit at Closeout**
	003		Final Application for Payment					
		-1	Application for Payment - AIA G702 and G703					**Submit at Closeout**
		-2	*Contractor's Affidavit of Payment of Debts and Claims* - AIA Document G706					**Submit at Closeout**
		-3	*Consent of Surety to Final Payment* - AIA Document G707					**Submit at Closeout**
		-4	*Contractor's Affidavit of Release of Liens* - AIA Document B706A					**Submit at Closeout**
06100			**Rough Carpentry**					
	001		Product Data:					
		-1	Wood Product Information					
		-2	Wood Preservative Materials, Application Instructions					
		-3	Fasteners/Anchors					
07410			**Metal Roofing and Siding**					
	001		Product Data:					
		-1	Metal Panel Product Information, Installation Instructions, Warranties					
		-2	Underlayment					
		-3	Insulations					
		-4	Mechanical Fasteners					
	002		Shop Drawings:					
		-1	Erection Drawings and Details					
		-2	Engineers's Calculations / Fastener Requirements					
	003		Qualifications					
		-1	Installer Experience / Manufacturer's Approval					
07530			**Thermoplastic Single Ply Roofing**					
	001		Product Data (Sheet Materials)					
		-1	PVC					
		-2	Elvaloy					
	002		Fastening System					
		-1	Mechanical Fasteners					
		-2	Adhesive					
	003		Insulation System					
		-1	Polyisocyanurate					
		-2	EPS					
		-3	Roof Coverboard					
		-4	Tapered Layout					
		-5	Insulation Fasteners/Adhesives					
	004		Accessories:					
		-1	Prefabricated curbs					
		-2	Prefabricated supports					
		-3	Sealants					
	005		Engineering Certifications / Product Approvals					

A/R/C Associates, Incorporated

601 North Fern Creek Avenue
Suite 100
Orlando, Florida 32803
(407) 896-7875 FAX (407) 898-6043

SUBMITTAL RECORD
(checklist / log)

Action Code **APP** - Approved **A/C** - Approved with Comments **R/R** - Revise and Re-submit **REJ** - Not Approved

The Submittal Checklist/Log represents the minimum submittal requirements for this project. The Contractor may submit any additional information beyond what is requested for review. If there is an item on the Checklist that does not apply to the project do not submit it.

PROJECT:	First Coast Technical College	Architect's Project No.	20021.00
	Building B	Notice to proceed issued:	Substantial Completion Date:
CONTRACTOR:			

Spec. Section	Submittal No.		Title/Description	Date Rec'vd	No. of Copies Rec'vd	ACTION	Date Returned	Comments
	006		Samples:					
		-1	Only as directed by the Architect					
	007		Qualifications:					
		-1	Applicator's Experience					
	008		Warranties:					
		-1	Manufacturer's Notice of Intent to Issue Warranty					
		-2	Applicator's Warranty					
07545			**Fluid Applied Flashing**					
	001		Product Data					
		-1	Product information					
		-2	Manufacturer's Installation Instructions					
	002		Shop Dwgs					
		-1	Manufacturer's Standard Details					
		-2	Special Details as required					
	003		Approvals					
		-1	Manufacturer's approval of installer firm					
		-2	Certification of compliance					
	004		Samples					
		-1	Cured membrane Sample					
		-2	Fleece Sample					
	005		MSDS					
		-1	Safety Data Sheets					
07620			**Sheet Metal Flashing and Trim**					
	001		Product Data:					
		-1	Sheet Materials:					
		-2	Accessories: Fasteners, Primer, Plastic Cement, Solder/Flux/Cleaner					
	002		Shop Drawings:					
		-1	Any Condition Not Shown on the Drawings					
	003		Samples/Mock-ups					
		-1	Only as Directed by the Architect. (Mock-ups will be in-place, typically)					
07900			**Joint Sealers**					
	001		Product Data:					
		-1	Joint Sealer Information, Color Charts, Installation Instructions, warranty, etc.					
	002		Accessories-					
		-1	Primer, Joint Cleaner, Backer Rod, etc.					
09900			**Painting**					
	001		Product Data:					
		-1	Information on All Finishing Products, Application Instructions, Surface Preparation, etc.					**NOT SUBMITTED**
		-2	Manufacturer's Color Chart for Each Product Required					**NOT SUBMITTED**
	002		Samples:					
		-1	Field Samples as May be Directed by the Architect					
	003		Qualifications					
		-1	Applicator's Experience					

A/R/C Associates, Incorporated

601 North Fern Creek Avenue
Suite 100
Orlando, Florida 32803
(407) 896-7875 FAX (407) 898-6043

SUBMITTAL RECORD
(checklist / log)

Action Code	**APP** - Approved **A/C** - Approved with Comments **R/R** - Revise and Re-submit **REJ** - Not Approved

The Submittal Checklist/Log represents the minimum submittal requirements for this project. The Contractor may submit any additional information beyond what is requested for review. If there is an item on the Checklist that does not apply to the project do not submit it.

PROJECT:	**First Coast Technical College**	Architect's Project No.	**20021.00**
	Building B	**Notice to proceed issued:**	**Substantial Completion Date:**
CONTRACTOR:			

Spec. Section	Submittal No.		Title/Description	Date Rec'vd	No. of Copies Rec'vd	**ACTION**	Date Returned	Comments
15000			**Mechanical Equipment**					
	001		Equipment Data:					
		-1	Exhaust Fan Performance Log Data Sheet					
		-2	Air Conditioning Equipment Performance Log Data Sheet					
15430			**Roof Drains**					
	001		Product Data:					
		-1	Roof Drain Information, Component Sizes, Rough-in Requirements, Service Sizes, and Finishes					
	002		Shop Drawings:					
		-1	Assembly and Support Requirements (As Required)					
16010			**Basic Electrical Requirements**					
	001		As May Be Directed by the Architect/Engineer					**NOT APPLICABLE**

PART 1 GENERAL

1.01 RELATED DOCUMENTS

A. The Work of this Section shall be included as a part of the Contract Documents of each Contractor and subcontractor on this Project.

1.02 SUMMARY

A. This Section includes administrative and procedural requirements for Owner Purchased materials/equipment.

1.03 PROCEDURES

A. The Contractor's bid shall include Florida State Sales and other applicable taxes in his bid for materials, supplies, and equipment. The Owner, being exempt from sales tax, reserves the right to make direct purchases of various construction materials and/or equipment included in the Contractor's bid and/or contract.

B. The Owner reserves the right to require the Contractor to assign some or all of his subcontractors or other agreements with material suppliers directly to the Owner. Any materials purchased by the Owner pursuant to such an assignment of a materials supply subcontractor or agreement shall be referred to as "Owner Direct Purchased materials", and the responsibilities of both the Owner and the Contractor relating to such Owner Purchased Materials shall be governed by the Owner pursuant to such an assignment of an equipment supply subcontractor agreement shall be referred to as "Owner-Direct Purchased equipment", and identical conditions to those outlined for materials, shall prevail for equipment purchases as well.

C. Material/equipment suppliers shall be selected by the Contractor awarded the contract by the competitive bid process. Supply contracts shall be awarded by the Contractor to the supplier whose bid/proposal is most advantageous to the Owner, price and other factors considered.

D. The Contractor shall supply the Owner a list of intended suppliers, vendors, and material men/ equipment men for consideration as Owner Direct Purchased Materials/Equipment. This list shall be submitted not later than the pre-construction conference. The Contractor shall submit price quotes from the vendors as well as a description of the materials/equipment to be supplied, estimated quantities and prices.

E. The Owner intends to furnish materials/equipment worth several million dollars of Owner Direct Purchased materials/equipment. Therefore, the Contractor shall prepare purchasing requisition request forms which shall, in form and detail, be acceptable to the Owner, specifically identifying the materials/equipment which the Owner may, in its discretion, elect to purchase directly. The purchasing requisition request forms shall include:
   1. the name, address, telephone number and contact person for the material/equipment supplier;
   2. the manufacturer or brand, model or specification number of the item;
   3. the quantity needed as estimated by the Contractor;

4. the price quoted by the supplier for the materials/equipment identified therein;
5. any sales tax associated with such quote;
6. shipping and handling and insurance costs;
7. delivery dates as established by the Contractor;
8. detail concerning bonds or letters of credit provided by the supplier if included in his proposal.

F. After receipt of a purchasing requisition request form, the Owner shall prepare purchase orders for items of material/equipment that the Owner chooses to purchase directly. Pursuant to the purchase order, the vendor will provide the required quantities of material/equipment at the price established in the vendor's quote to the Contractor less any sales tax associated with such price. The Owner's purchasing Agent shall be the approving authority for the Owner on purchase orders in conjunction with Owner Direct Purchased Materials/Equipment. The purchase order shall require that the supplier provide the required shipping and handling insurance. The purchase order shall also require the delivery of the Owner Direct Purchased Materials/Equipment on the delivery dates provided by the Contractor in the purchasing requisition request form.

G. In conjunction with the execution of the purchase orders by the suppliers, the Contractor shall execute and deliver to the Owner one or more deductive change order proposal requests referencing the full value of all Owner Direct Purchased Materials/Equipment to be provided by each supplier from whom the Owner elected to purchase materials/equipment directly, plus all sales taxes associated with such materials/equipment in the Contractor's bid to the Owner, plus any savings to the Contractor in the cost of Payment Bonds and Performance Bonds associated with the Owner Direct Purchased Materials/Equipment. The Owner's Purchasing Agent and/or the School Board shall be the approving authority for the Owner on deductive change orders in conjunction with Owner Direct Purchased Materials/Equipment.

H. The Contractor shall be fully responsible for all matters relating to the receipt of materials/equipment furnished by the Owner as provided herein including, but not limited to, verifying correct quantities, verifying documents of orders in a timely manner, shop drawing submittals, coordinating purchases, providing, obtaining and administering, all warranties and guarantees as required by the contract Documents, inspection and acceptance of the goods at time of delivery, and loss or damage to equipment and materials following acceptance of items by the Owner due to the negligence of the Contractor. The Contractor shall coordinate delivery schedules, sequence of delivery, loading orientation and other arrangements normally required by Contractor for the particular materials/equipment furnished. The Contractor shall provide all services required for the unloading, handling and storage of materials/equipment through installation. The Contractor agrees to indemnify and hold harmless the Owner from any and all claims of whatever nature resulting from non-payment of goods to suppliers arising from the actions of the Contractor.

I. As Owner Direct Purchased Materials/Equipment are delivered to the jobsite, the Contractor shall visually inspect all shipments from the suppliers and shall approve the vendor's invoice for material/equipment delivered. The Contractor shall assure that each delivery of Owner Direct Purchased Materials/Equipment is accompanied by documentation adequate to identify the purchase order against which the purchase is made. This documentation may consist of a delivery ticket and an invoice from the supplier confirming the purchase order together with

such additional information as the Owner may require. The Contractor will then forward the invoice to the Owner through the Architect to the Purchasing Agent for payment. The Contractor shall also have the Owner's representative attest to the delivery and receipt of such goods, by signing all delivery tickets.

J. The Contractor shall ensure that Owner Direct Purchased Materials/Equipment conform to the specifications, and shall determine prior to the incorporation into the work if such material/equipment are patently defective, and whether such material/equipment are identical to the material/equipment ordered and match the description on the bill of lading. If the Contractor discovers defects or non-conformities in Owner Direct Purchased Materials/Equipment upon such visual inspection, the Contractor shall not utilize such defective or nonconforming materials/equipment in the work and instead shall promptly notify the Owner and the vendor of the defective or nonconforming condition so that repair or replacement of those materials/equipment can occur without any undue delay or interruption to the project. If the Contractor fails to perform such inspection and otherwise incorporates into the work such defective or nonconforming Owner Direct Purchased Materials/Equipment, the condition of which is either known or should have been known by performance of an inspection, the Contractor shall be responsible for all damages to the Owner resulting from the Contractor's incorporation of such materials/equipment into the project, including liquidated or delay damages.

K. The Contractor shall maintain records of all Owner Direct Purchased Materials/Equipment that it incorporates into the work from the stock of Owner Direct Purchased Materials/Equipment in its possession. The Contractor shall account monthly to the Owner though the Program Manager and the Purchasing Agent of the Owner for any Owner Direct Purchased Materials/Equipment delivered into the Contractor's possession, indicating portions of all such materials/equipment that have been incorporated into the work.

L. The Contractor shall be responsible for obtaining and managing all warranties and guarantees for all materials/equipment and products required by the Contract Documents. All repair, maintenance or damage-repair calls shall be forwarded to the Contractor for resolution with the appropriate supplier, vendor, or subcontractor.

M. On a monthly basis the Contractor shall review invoices submitted by all suppliers of Owner Direct Purchased Materials/Equipment delivered to the project site during that month and either concur or object to the Owner's issuance of payment to the supplier, based upon the Contractor's records of materials/equipment delivered to the site and any defects in such materials/equipment. In order to arrange for prompt payment to the supplier, the Contractor shall provide to the Owner a list indicating the acceptance of the goods or materials/equipment within fifteen days of receipt of said goods or materials/equipment. The list shall include a copy of the applicable purchase order, invoices, delivery tickets, written acceptance of the delivered items, and such other documentation as may be reasonably required by the Owner. Upon receipt of the appropriate documentation, the Owner shall prepare a check drawn to the supplier based upon the receipt of data provided. This check will be released, delivered and remitted directly to the supplier. The Contractor agrees to assist the Owner to immediately obtain partial or final release of liens as appropriate.

N. Materials/Equipment ordered which are found to be short of the quantity actually needed shall be augmented and paid for by the Contractor at no additional expense to the Owner. Materials/equipment ordered in excess of the quantity actually needed shall not be invoiced and no credit will be given the Contractor or vendor. Materials/equipment ordered, delivered and not used shall be stored by the Contractor and become the Contractor's responsibility for disposal if no salvage value is first available to the Owner.

O. The Owner will not be responsible for storage of any Owner Direct Purchased Materials/Equipment.

P. The Performance and Material Bonds shall be in the amount of the Contract plus Owner Direct Purchased Materials/Equipment, and shall satisfy the requirements of Florida State Statues 2.35.32 and 2.55.05.

Q. Specific items to be <u>considered</u> for purchase by the Owner include:

1. Underground Drainage System Components
2. Underground Water System Components
3. Underground Sanitary System Components
4. Underground Irrigation System Components
5. Irrigation Pump Station/Controls
6. Fencing
7. Reinforcing Steel
8. Concrete
9. Pre-Cast Concrete
10. Structural Steel
11. Casework
12. Roofing Tile
13. Windows, Doors and Frames
14. Finish Hardware
15. Acoustical Tile
16. Wood Flooring
17. Carpet
18. Stage Rigging
19. Kitchen Equipment
20. Plumbing Fixtures
21. Chillers
22. Cooling Towers
23. Ductwork
24. Air Handling Units
25. Chilled Water Piping
26. Chilled Water Pumps
27. Fire Pump
28. Electrical Switchgear
29. Light Fixtures
30. Transformers
31. Electrical Panel Boards
32. Stage Lighting
33. Emergency Generator

34. Fire Alarm and/or Security Systems Equipment
35. Telecommunications Components (monitors, brackets, fiber optics, etc.)

R. The Owner reserves the right to add other large purchase price items to this list.

S. Ten percent (10%) retainage will not be withheld for Owner Direct Purchased Materials/Equipment.

PART 2 PRODUCTS (Not Applicable)

PART 3 EXECUTION (Not Applicable)

END OF SECTION

PART 1 GENERAL

1.1 SECTION INCLUDES

A. Quality assurance - control of installation.

B. Tolerances

C. References.

D. Mockup.

E. Inspecting and testing laboratory services.

F. Manufacturers' field services and reports.

1.2 RELATED SECTIONS

A. Section 01090 - Reference Standards.

B. Section 01330 – Submittal Procedures.

C. Section 01600 – Product Requirements.

1.3 QUALITY ASSURANCE - CONTROL OF INSTALLATION

A. Monitor quality control over suppliers, manufacturers, Products, services, site conditions, and workmanship, to produce Work of specified quality.

B. Comply with manufacturers' instructions, including each step in sequence.

C. Should manufacturers' instructions conflict with Contract Documents, request clarification from Architect before proceeding with work.

D. Comply with specified standards as minimum quality for the Work except where more stringent tolerances, codes, or specified requirements indicate higher standards or more precise workmanship.

E. Perform work by persons qualified to produce workmanship of specified quality.

F. Secure Products in place with positive anchorage devices designed and sized to withstand stresses, vibration, physical distortion, or disfigurement.

1.4 TOLERANCES

A. Monitor tolerance control of installed Products to produce acceptable Work. Do not permit tolerances to accumulate.

B. Comply with manufacturers' tolerances. Should manufacturers' tolerances conflict with Contract Documents, request clarification from Architect before proceeding.

C. Adjust Products to appropriate dimensions; position before securing Products in place.

1.5 REFERENCES

A. For Products or workmanship specified by association, trade, or other consensus standards, complies with requirements of the standard, except when more rigid requirements are specified or are required by applicable codes.

B. Conform to reference standard by date of issue current on date of Owner-Contractor Agreement except where a specific date is established by code.

C. Obtain copies of standards where required by product specification sections.

D. The contractual relationship, duties, and responsibilities of the parties in Contract nor those of the Architect shall not be altered from the Contract Documents by mention or inference otherwise in any reference document.

1.6 MOCK-UP

A. Assemble and erect specified items with specified attachment and anchorage devices, flashing, seals, and finishes.

B. Accepted mock-ups are representative of the quality required for the Work.

C. Where mock-up has been accepted by Architect and is specified in product specification sections to be removed; remove mock-up and clear area when directed to do so.

1.7 INSPECTING AND TESTING LABORATORY SERVICES

A. Tests will be performed under provisions identified in this section and identified in the respective product specification sections.

B. Owner will appoint and employ services of an independent firm to perform inspecting and testing. Contractor shall pay for services.

C. The independent firm will perform inspections, tests, and other services specified in individual specification sections and as required by the Architect or the Owner.

D. Inspecting, testing, and source quality control may occur on or off the project site. Perform off-site inspecting or testing as required by the Architect or the Owner.

E. Reports will be submitted by the independent firm to the Architect and Contractor, in duplicate, indicating observations and results of tests and indicating compliance or non-compliance with Contract Documents.

F. Cooperate with independent firm; furnish samples of materials, design mix, equipment, tools, storage, safe access, and assistance by incidental labor as requested.
   1. Notify Architect and independent firm 24 hours prior to expected time for operations requiring services.
   2. Make arrangements with independent firm and pay for additional samples and tests required for Contractor's use.

G. Testing or inspecting does not relieve Contractor to perform Work to contract requirements.

H. Retesting required because of non-conformance to specified requirements shall be performed by the same independent firm on instructions by the Architect. Payment for retesting will be charged to the Contractor by deducting inspecting or testing charges from the Contract Sum/Price.

1.8 MANUFACTURERS' FIELD SERVICES AND REPORTS

A. When specified in individual specification sections, require material or Product suppliers or manufacturers to provide qualified staff personnel to observe site conditions, conditions of surfaces and installation, quality of workmanship, start-up of equipment, test, adjust and balance of equipment as applicable, and to initiate instructions when necessary.

B. Submit qualifications of observer to Architect 10 days in advance of required observations. Observer subject to approval of Architect.

C. Report observations and site decisions or instructions given to applicators or installers that are supplemental or contrary to manufacturers' written instructions.

D. Submit report in duplicate within 5 days of observation to Architect for information.

PART 2 PRODUCTS (Not Used)

PART 3 EXECUTION (Not Used)

END OF SECTION

PART 1 GENERAL

1.1 RELATED DOCUMENTS

A. Drawings and General Provisions of Contract, including General and Supplementary Conditions and other Division 1 Specification Sections, apply to Work of this Section.

1.2 SUMMARY

A. The Owner shall employ and pay for services of an independent testing laboratory to perform specified inspection, sampling, and testing services.

B. Inspections and testing required by laws, ordinances, rules, regulations, or orders of public authorities and General Conditions.

C. Certification of products and mill test reports: Respective Specification Sections.

D. Test, adjust, and balance of equipment (to be the responsibility of the Contractor as identified in other contract specifications sections).

E. Inspection, sampling, and testing: Soils, asphalt, concrete, steel, masonry, mortar, and grout.

F. Related Work Specified Elsewhere
1. Refer to Section 01450 - Quality Control.

1.3 QUALIFICATIONS OF LABORATORY AND SUBMITTALS

A. Meet requirements of ASTM E329, current edition "Standards of Recommended Practice for Inspection and Testing Agencies for Concrete, Steel, and Bituminous Materials as used in Construction."
1. The term "agency" as used in Section 4 of ASTM E329 shall mean the local or closest office of said agency.

B. Laboratory qualifications for inspection, sampling and testing of soils and aggregates shall be comparable to the requirements of ASTM E329.

C. Testing Equipment
1. Calibrated at maximum 12 month intervals by devices of accuracy acceptable to the Architect.

D. Submit documentation of specified requirements. Submit 3 copies to the Architect.

E. All testing and inspection performed by the testing laboratory shall be under the direct supervision of a professional engineer licensed in the state of the construction activities. This professional engineer shall submit a letter certifying that all testing services are in conformance with the standards and specifications as specified in these Contract Documents. The letter shall also certify that all tested and inspected items and procedures conform to the Contract Documents, except where specifically noted on the inspection reports.

F. All inspectors shall have at least one year of experience performing the type of inspections to be performed on this project. Qualifications and experience of proposed inspectors shall be submitted to the Architect for approval prior to the beginning of any testing.

1.4 LABORATORY DUTIES, LIMITATIONS OF AUTHORITY

A. Provide qualified personnel promptly on notice.

B. Perform specified inspections, sampling, and testing of materials and methods of construction.
1. Comply with specified standards; ASTM, other recognized authorities and as specified.
2. Ascertain compliance with requirements of Contract Documents.

C. Promptly notify the Architect and Contractor of irregularities in the Work to be performed with the Documents and deficiencies of Work performed which are observed during performance of services.

D. Promptly submit 3 copies of reports of inspections and tests to the Architect, including the following information, as applicable:
1. Date issued.
2. Project title and number.
3. Testing laboratory name and address.
4. Name and signature of field inspector.
5. Date of inspection or sampling.
6. Record of temperature and weather.
7. Name and signature of laboratory inspector.
8. Identification of product and specification section.
9. Location in project.
10. Designation of the work and test method.
11. Observations regarding compliance with Contract Documents.
12. Complete inspection or test data.
13. Test results and an interpretation of test results.
14. Recommendations on retesting.

E. Laboratory is not authorized to:
   1. Release, revoke, alter, or enlarge on requirements of Contract Documents.
   2. Approve or accept portion of Work.
   3. Perform duties of the Contractor.

1.5 CONTRACTOR'S RESPONSIBILITIES

A. Cooperate with laboratory personnel to provide access to Work and to manufacturer's operations.

B. Assist laboratory personnel in obtaining samples at the site.

C. Notify laboratory sufficiently in advance of operations to allow for his assignment of personnel and scheduling of tests.

D. Should the Contractors fail to schedule laboratory services or fail to cancel laboratory services, if the need arises, all additional cost shall be borne by the Contractors.

E. Employ, and pay for, services of a separate, equally qualified independent testing laboratory to perform additional inspections, sampling and testing required when initial tests indicate work does not comply with Contract Documents.
   1. Separate laboratory shall be approved by the Owner and the Architect.

PART 2 PRODUCTS (Not Applicable)

PART 3 EXECUTION (Not Applicable)

END OF SECTION

PART 1 GENERAL

1.1 SECTION INCLUDES

A. Temporary Utilities: Electricity, lighting, heat and air conditioning, ventilation, telephone service, water, and sanitary facilities.

B. Temporary Controls: Barriers, enclosures and fencing, protection of the Work, and water control.

C. Construction Facilities: Parking, progress cleaning, project signage, and temporary buildings.

1.2 RELATED SECTIONS

A. Section 01740 – Construction - Final cleaning.

1.3 TEMPORARY ELECTRICITY

A. Cost: By Contractor; provide and pay for power service required from utility source or provide power generation on-site as needed.

B. Provide power outlets for construction operations, with branch wiring and distribution boxes located as required. Provide flexible power cords as required.

C. Provide adequate distribution equipment, wiring, and outlets to provide single phase branch circuits for power and lighting as needed for construction activities.

1.4 TEMPORARY LIGHTING FOR CONSTRUCTION PURPOSES

A. Provide and maintain lighting for construction operations.

B. Provide branch wiring from power source to distribution boxes with lighting conductors, pigtails, and lamps as required.

C. Maintain lighting and provide routine repairs.

D. Permanent building lighting may not be utilized during construction.

1.5 TEMPORARY HEATING AND COOLING

A. When required by Owner, provide heating and cooling devices needed to maintain existing conditions in building(s). Contractor will pay cost of energy used. Exercise measures to conserve energy.

B. Prior to operation of permanent equipment for temporary heating and cooling purposes, verify that installation is approved for operation, equipment is lubricated and filters are in place. Provide and pay for operation, maintenance, and regular replacement of filters and worn or consumed parts.

C. Maintain minimum ambient temperature of 74 degrees F in occupied areas unless indicated otherwise in specifications.

1.6 TEMPORARY VENTILATION

A. Ventilate enclosed areas to assist cure of materials, to dissipate humidity, and to prevent accumulation of dust, fumes, vapors, or gases.

B. Utilize existing ventilation equipment. Extend and supplement equipment with temporary fan units as required to maintain clean air for construction operations.

1.7 TELEPHONE SERVICE

A. Provide, maintain and pay for telephone service.

1.8 TEMPORARY WATER SERVICE

A. Owner will pay cost of water used, unless this privilege is abused by the Contractor (or their sub-contractors). The Owner may revoke this privilege at any time based on their site inspections, at which time the Contractor will become responsible for the cost and logistics of providing all water needed for construction activities for this project. Exercise measures to conserve water.

B. Extend branch piping with outlets located so water is available by hoses with threaded connections.

1.9 TEMPORARY SANITARY FACILITIES

A. Provide and maintain required facilities and enclosures. Existing facility use is not permitted.

1.10 BARRIERS

A. Provide barriers to prevent unauthorized entry to construction areas and to protect existing facilities and adjacent properties from damage from construction operations and demolition.

B. Provide barricades and covered walkways required by governing authorities for public rights-of-way and for public access to existing building.

C. Provide protection for plant life designated to remain. Replace damaged plant life.

D. Protect non-owned vehicular traffic, stored materials, site, and structures from damage.

1.11 FENCING

A. Construction: Commercial grade chain link fence.

B. Provide 6' high fence around construction staging areas and storage locations. Equip with vehicular or pedestrian gates with locks. Fencing is at the Contractor's discretion during summer break (as they deem necessary for safety and security), but required prior to teachers and staff returning to campus at the end of the summer break.

1.12 WATER CONTROL

A. Grade site to drain. Maintain site drainage affected by the work.

1.13 PROTECTION OF INSTALLED WORK & EXISTING FINISHES

A. Protect installed Work and provide special protection where specified in individual specification sections.

B. Install temporary and removable protection for installed Products. Control activity in immediate work area to prevent damage.

C. Install protective coverings at walls, floors, ceilings and other interior finished surfaces.

D. Protect finished floors, stairs, and other surfaces from traffic, dirt, wear, damage, or movement of heavy objects, by protecting with durable sheet materials.

E. Prohibit traffic or storage upon waterproofed or roofed surfaces. If traffic or activity is necessary, obtain recommendations for protection from waterproofing or roofing material manufacturer.

F. Prohibit traffic from landscaped areas.

1.14 SECURITY

A. Provide security and facilities to protect Work, and Owner's operations from unauthorized entry, vandalism, or theft.

B. Coordinate with Owner's security program.

1.15 ACCESS ROADS

A. Maintain all existing drives and access roads currently on-site for the use of the Owner, staff and other maintenance procedures anticipated by the Owner during the construction period of this project.

B. Any blockage of traffic on site must be coordinated with the Owner one week prior to its occurrence. Provide detours as necessary for unimpeded traffic flow.

C. Provide and maintain access to fire hydrants, free of obstructions.

1.16 PARKING

A. Arrange for temporary with Owner parking areas to accommodate construction personnel.

B. When site space is not adequate, provide additional off-site parking.

1.17 PROGRESS CLEANING AND WASTE REMOVAL

A. Maintain areas free of waste materials, debris, and rubbish. Maintain site in a clean and orderly condition on a daily basis.

B. Remove debris and rubbish from pipe chases, plenums, attics, crawl spaces, and other closed or remote spaces, prior to enclosing the space.

C. Broom and vacuum clean interior areas dirtied by construction work on a daily basis.

D. Collect and remove waste materials, debris, and rubbish from site daily and dispose off-site.

E. Open free-fall chutes not permitted. Terminate closed chutes into appropriate containers with lids.

1.18 FIELD OFFICES, TRAILERS AND SHEDS

A. A Field Office, as well as any storage trailers and sheds are to be provided at the Contractor’s discretion as required to properly execute the work of this project.

B. Coordinate with Owner at pre-construction meeting, location of office(s), trailer(s) and shed(s). When possible, maintain a minimum distance of 30 feet from existing structures.

1.19 REMOVAL OF UTILITIES, FACILITIES, AND CONTROLS

A. Remove temporary utilities, equipment, facilities, materials, prior to Substantial Completion inspection.

B. Clean and repair damage caused by installation or use of temporary work.

C. Restore existing facilities used during construction to original condition. Restore permanent facilities used during construction to specified condition.

PART 2 PRODUCTS (Not Used)

PART 3 EXECUTION (Not Used)

END OF SECTION

PART 1 GENERAL

1.1 RELATED DOCUMENTS

A. The Work of this Section shall be included as a part of the Contract Documents of the Contractor on this Project.

1.2 SUMMARY

1. This Section includes administrative and procedural requirements governing the Contractor's selection of products for use in the Project.
2. Product standards and quality – substitutions
3. Substitutions
4. Manufacturer's directions
5. Warranties
6. Material delivery and responsibilities
7. Protection
8. Acceptance of equipment or systems

B. It is the intent of the Specifications and Drawings to accomplish a complete and first-grade installation executed by competent and experienced workmen.

C. Equipment, specialties, and similar items shall be checked for compliance and fully approved prior to installation. The Contractor is cautioned that work or equipment installed without approval is subject to condemnation and removal, with subsequent replacement with an approved item without extra remuneration.

D. Related Work Specified Elsewhere

1. Section A - Instructions to Bidders
2. General Conditions
3. Section 01330 - Submittal Procedures

1.3 DEFINITIONS

A. Definitions used in this Article are not intended to change the meaning of other terms used in the Contract Documents, such as “specialties,” “systems,” “structure,” “finishes,” “accessories,” and similar terms. Such terms are self explanatory and have well recognized meanings in the construction industry.

1. “Products” are items purchased for incorporation in the Work, whether purchased for the project or taken from previously purchased stock. The term “product” includes the terms “material,” “equipment,” “system,” and terms of similar intent.
2. “Named Products” are items identified by the manufacturer’s product name, including make or model number or other designation, shown or listed in the manufacturer’s published product literature that is current as of the date of the Contract Documents.

B. "Materials" are products substantially shaped, cut, worked, mixed, finished, refined, or otherwise fabricated, processed, or installed to form a part of the Work.

C. "Equipments" is a product with operational parts, whether motorized or manually operated, that require service connections, such as wiring or piping.

1.4 QUALITY ASSURANCE

A. Source Limitations: To the fullest extent possible, provide products of the same kind from a single source.

B. Compatibility of Options: When the Contractor is given the option of selecting between 2 or more products for use on the project, the product selected shall be compatible with products previously selected, even if previously selected products were also options.
   1. The prime contractor is responsible for providing products and construction methods that are compatible with products and construction methods of other prime or separate contractors.

1.5 PRODUCT DELIVERY, STORAGE, AND HANDLING

A. Deliver, store, and handle products according to the manufacturer's recommendations, using means and methods that will prevent damage, deterioration, and loss, including theft.
   1. Schedule delivery to minimize long term storage at the site and to prevent overcrowding of construction spaces.
   2. Coordinate delivery with installation time to assure minimum holding time for items that are flammable, hazardous, easily damaged, or sensitive to deterioration, theft, and other losses.
   3. Deliver products to the site in an undamaged condition in the manufacturer's original sealed container or other packaging system, complete with labels and instructions for handling, storing, unpacking, protecting, and installing.
   4. Inspect products upon delivery to ensure compliance with the Contract Documents and to ensure that products are undamaged and properly protected.
   5. Store products of the site in a manner that will facilitate inspection and measurement of quality or counting of units.
   6. Store heavy materials away from the project structure in a manner that will not endanger the supporting construction.
   7. Store products subject to damage by elements above ground, under cover in a weathertight enclosure, with ventilation adequate to prevent condensation. Maintain temperature and humidity within range required by manufacturer's instructions.

PART 2 PRODUCTS

2.1 PRODUCT STANDARDS AND QUALITY - SUBSTITUTIONS

A. The Contract is based on the materials, equipment, and methods described in the Contract Documents.

B. Where in the Drawings and Specifications certain products, manufacturer's trade names, or catalog numbers are given, it is done for the expressed purpose of establishing a basis of quality, durability, and efficiency of design in harmony with the work outlined and is not intended for the purpose of limiting competition.

C. The Architect will consider proposals for substitution of materials, equipment, and methods only when such proposals are accompanied by full and complete technical data and all other information required by the Architect to evaluate the proposed substitution.

D. Do not substitute materials, equipment, or methods unless such substitution has been specifically approved for this Work by the Architect.
1. Refer to Contract “Front End” Section A – Information for Bidders.

E. "Or equal":
1. Where the phrase "or equal" or "or equal as approved by the Architect" occurs in the Contract Documents, do not assume that material, equipment, or methods will be approved as equal by the Architect unless the item has been specifically approved for this Work by the Architect in an Addendum.
2. The decision of the Architect shall be final.

F. Availability of Specified Items
1. Verify prior to bidding that specified items will be available in time for installation during orderly and timely progress of the work.
2. In the event specified item or items will not be so available, so notify the Architect prior to receipt of bids.
3. Costs of delays because of non availability of specified items, when such delays could have been avoided by the Contractor, will be back charged as necessary and shall not be borne by the Owner.

G. Where the questions of appearance, artistic effect, or harmony of design are concerned, the Architect reserves the right to refuse approval of substituted products proposed to be substituted for that specified, if in his opinion the item to be substituted is not harmonious to the finished effect and appearance desired, as portrayed in the Drawings and Specifications. The Architect's said refusal to approve, established by this paragraph, is final.

2.2 SUBSTITUTIONS

A. Substitutions: Changes in products, materials of construction required by the Contract Documents proposed by the Contractor after award of the Contract are considered to be requests of substitutions. The following are not considered to be request for substitutions.
1. Substitutions requested during the bidding period, accepted by Addendum prior to award of the Contract, are included in the Contract Documents and are not subject to requirements specified in this Section for substitutions.
2. Revisions to the Contract Documents requested by the Owner or Architect.
3. Specified options of products and construction methods included in the Contract Documents.
4. The Contractor's determination of and compliance with governing regulations and orders issued by governing authorities.

B. Conditions: The Architect will receive and consider the Contractor's request for substitution when one or more of the following conditions are satisfied, as determined by the Architect. If the following conditions are not satisfied, the Architect will return the requests without action except to record noncompliance with these requirements:
1. Extensive revisions to the Contract Documents are not required.
2. Proposed changes are in keeping with the general intent of the Contract Documents.
3. The request is timely, fully documented, and properly submitted.
4. The specified product or method of construction cannot be provided within the Contract Time. The Architect will not consider the request if the product or method cannot be provided as a result of failure to pursue the Work promptly or coordinate activities properly.
5. The requested substitution offers the Owner a substantial advantage, in cost, time, energy conservation, or other considerations, after deducting additional responsibilities the Owner must assume. The Owner's additional responsibilities may include compensation to the Architect for redesign and evaluation services, increased cost of other construction by the Owner, and similar considerations.
6. The specified product or method of construction cannot receive necessary approval by a governing authority, and the requested substitution can be approved.
7. The specified product or method of construction cannot be provided in a manner that is compatible with other materials and where the Contractor certifies that the substitution will overcome the incompatibility.
8. The specified product or method of construction cannot provide a warranty required by the Contract Documents and where the Contractor certifies that the proposed substitution provides the required warranty.
9. A substitution which is indicated or implied on shop drawings or within product data submittals without a formal request from Bidder will not be considered for acceptance.

10. The “Product Substitution Request” and “Product Substitution Information” forms attached to this section must be completed and submitted with appropriate “back-up” data for the substitution to be considered for acceptance.

C. Products of other manufacturers will be considered for acceptance provided they equal or exceed the material requirements and functional qualities of the specified product. Requests for Architect’s approval and complete technical data for evaluation must be received at least 10 days prior to bid due date. Additional approved manufacturers will be issued by Addendum.

2.2 MANUFACTURER'S DIRECTIONS

A. Manufactured products shall be applied, installed, connected, erected, used, cleaned, and conditioned in accordance with the manufacturer's printed directions, unless herein specified to the contrary. Where manufacturer's printed directions are available and where reference is made to manufacturer's directions in the Specifications, the Contractor shall submit 2 copies of such directions to the Architect prior to the beginning of any Work covered thereby.

B. Where specific installation instructions are not part of these Specifications and Drawings, equipment shall be installed in strict accordance with instructions from the respective manufacturers. Where installation instructions included in these Specifications or Drawings are at a variance with instructions furnished by the equipment manufacturer, the Contractor shall make written request for clarification from the Architect.

C. In accepting or assenting to the use of an apparatus or material, or make, or arrangement thereof, the Architect in no way waives any of the requirements of these Specifications or the warranty embodied therein.

2.3 WARRANTIES

A. Specific warranties or bonds called for in the Contract Documents, in addition to that falling under the general warranty as set forth in General Conditions, shall be furnished in accordance with the requirements of the Specifications.
1. Manufacturer’s disclaimers and limitations on product warranties do not relieve the Contractor of the warranty on the Work that incorporates the products. Manufacturer’s disclaimers and limitations on product warranties do not relieve suppliers, manufacturers, and subcontractors required to countersign special warranties with the Contractor.
2. Owner’s Recourse: Expressed warranties made to the Owner are in addition to implied warranties and shall not limit the duties, obligations, rights, and remedies otherwise available under law. Expressed warranty periods shall not be interpreted as limitations on the time in which the Owner can enforce such other duties, obligations, rights, or remedies.

B. The Contractor shall and does hereby agree to warrant for a period of one year, or for longer periods, where so provided in the Specifications, as evidenced by the date of Substantial Completion issued by the Architect, all products installed under the Contract to be of good quality in every respect and to remain so for periods described herein.

C. Should defects develop in the aforesaid Work within the specified periods, due to faults in products or their workmanship, the Contractor hereby agrees to make repairs and do necessary Work to correct defective Work to the Architect's satisfaction. Such repairs and corrective Work, including costs of making good other Work damaged by or otherwise affected by making repairs or corrective Work, shall be done without cost to the Owner and at the entire cost and expense of the Contractor within 14 days after written notice to the Contractor by the Owner.

1. Related Damages and Losses: When correcting failed or damaged warranted construction, remove and replace construction that has been damaged as a result of such failure or must be removed and replaced to provide access for correction of warranted construction.
2. Reinstatement of Warranty: When Work covered by a warranty has failed and been corrected by replacement or rebuilding, reinstate the warranty by written endorsement. The reinstated warranty shall be equal to the original warranty with an equitable adjustment for depreciation.

D. Nothing herein intends or implies that the warranty shall apply to Work which has been abused or neglected or improperly maintained by the Owner or his successor in interest.

E. Where service on products is required under this Article, it shall be promptly provided when notified by the Owner and no additional charge shall be made, unless it can be established that the defect or malfunctioning was caused by abuse or accidental damage not to be expected under conditions of ordinary wear and tear.

F. The manufacturer and supplier expressly warrants that each item of equipment furnished by him and installed in this Project is suitable for the application shown and specified in the Contract Documents and includes features, accessories, and performing characteristics listed in the manufacturer's catalog in force on the date bids are requested for the Work. This warranty is intended as an assurance by the manufacturer that his equipment is not being misapplied and is fit and sufficient for the service intended. This warranty is in addition to and not in limitation of any other warranty or remedy required by law or by the Contract Documents. It shall be the responsibility of the Contractor for the particular equipment to obtain this warranty in writing.

G. In case the Contractor fails to do Work so ordered, the Owner may have work done and charge the cost thereof against monies retained as provided for in the Agreement and, if said retained monies shall be insufficient to pay such cost or if no money is available, the Contractor and his Sureties shall agree to pay to the Owner the cost of such Work.

2.5 MATERIAL DELIVERY AND RESPONSIBILITIES

A. The Contractor shall be responsible for materials he orders for delivery to the jobsite. Responsibility includes, but is not limited to, receiving, unloading, storing, protecting, and setting in place; ready for final connections.

1. The Owner will not be responsible for deliveries related to the construction or operation of the Contractor. The Owner cannot sign delivery forms for the Contractor.

B. Contractor shall insure that products are delivered to the Project in accordance with the Construction Schedule of the Project. In determining date of delivery, sufficient time shall be allowed for shop drawings and sample approvals, including the possibility of having to resubmit improperly prepared submittals or products other than those specified and the necessary fabrication or procurement time along with the delivery method and distance involved.

2.6 PROTECTION

A. The Contractor shall protect building elements and products subject to damage. Should workmen or other persons employed or commissioned by the Contractor be responsible for damage, the entire cost of repairing said damage shall be assumed by said Contractor. Should damage be done by a person or persons not employed or commissioned by the Contractor, the Contractor shall make repairs and charge the cost to the guilty person or persons. The Contractor shall be responsible for collecting such charges.

B. The Contractor shall protect products prior to installation and final acceptance. Storage shall be dry, clean, and safe. Materials or equipment damaged, deteriorated, rusted, or defaced due to improper storage, shall be fully repaired, refinished, or replaced, as required by the Architect. Products lost through theft or mishandling shall be replaced by the Contractor without cost to the Owner.

2.7 ACCEPTANCE OF EQUIPMENT OR SYSTEMS

A. The Owner will not accept the start of the warranty period on systems or equipment until Substantial Completion is issued to the Contractor for Owner's occupancy of the building, in part or whole. The Contractor shall make such provisions as required to extend the manufacturer's warranty from time of initial operation of systems or equipment until Substantial Completion is given in writing.

PART 3 EXECUTION (Not Applicable)

END OF SECTION

Product Substitution Request

To: _____

_____

We hereby submit for your consideration the following product instead of the specified item for the above project:

DRAWING NO. _____ DRAWING NAME _____

SPEC. SEC .	SPEC NAME	PARAGRAPH	SPECIFIED ITEM
_____	_____	_____	_____

Proposed Substitution: _____

Why Substitution Requested: _____

_____

Attach complete information on changes to Drawings or Specifications which proposed substitution will require for its proper installation.

Submit with request necessary samples and substantiating data to prove equal quality and performance to that which is specified. Clearly mark manufacturer's literature to indicate equality in performance.

The undersigned certifies that the function, appearance and quality are of equal performance and assumes liability for equal performance, equal design and compatibility with adjacent materials.

Submitted by:

_____ Signature (Contractor)	_____ Title
_____ Firm	_____ Telephone
_____ Address	_____ Fax Number
_____ Telephone	_____ Date

Signature shall be by person having authority to legally bind the Contractor to the above terms, failure to provide legally binding signature will result in retraction of approval.

For use by the Architect:	For use by the Owner:
___ Recommended ___ Recommended as Noted	___ Approved
___ Not Recommended ___ Received too late	___ Not Approved
___ Insufficient data received	___ Approved as noted
By _____	By _____
Date _____	Date _____

Product Substitution Information

Fill in blanks Below:

A. Does the substitution affect dimensions shown on Drawings?
Yes _____ No _____ If yes, clearly indicate changes.
_____

B. Will the undersigned pay for changes to the building design, including engineering and detailing costs caused by the requested substitutions?
Yes _____ No _____ If no, fully explain:
_____

C. What effect does substitution have on other Contracts or other trades?
_____

D. What effect does substitution have an construction schedule?
_____

E. Manufacturer's warranties of the proposed and specified items are:
_____ Same _____ Different. If different, fully explain:
_____

F. Reason for Request:
_____

G. Itemized comparison of specified item(s) with the proposed substitution; list significant variations:
_____
_____

H. This substitution will amount to a credit to the Owner of:
_____
_____dollars ($_____)

I. Designation of maintenance services and sources:
_____

J. Attachments: (Attach additional sheets if required.)

PART 1 GENERAL

1.1 RELATED DOCUMENTS

A. Drawings and General Provisions of the Prime Contract, including General and Supplementary Conditions, apply to Work of this Section.

B. Section 01110 – Summary of the Work.

1.2 DEFINITIONS

A. "Cutting and patching" includes cutting into existing construction to provide for the installation or performance of other work and subsequent fitting and patching required to restore surfaces to their original condition.

B. "Cutting and patching" is performed for coordination of the work, to uncover work for access or inspection, to obtain samples for testing, to permit alterations to be performed, and for other similar purposes.

C. Cutting and patching performed during the manufacturer of products or during the initial fabrication, erection, or installation processes is not considered to be "cutting and patching" under this definition. Drilling of holes to install fasteners and similar operations are also not considered to be "cutting and patching".

D. Selective demolition is recognized as related but separate categories of Work, which may or may not require cutting and patching as defined in this Section; refer to Section 02070 – Selective Demolition.

1.3 DESCRIPTION OF WORK

A. Each sub-contractor shall make arrangements with other subcontractors and the General Contractor for fitting his Work into the general construction. Where the sub-contractor was given sufficient information as to required openings prior to construction, then the cost for cutting and restoring shall be paid for by the subcontractor failing to provide the required openings.

B. Cutting or restoring performed by subcontractors which is not accepted by the General Contractor shall have such correction or restoration work performed when directed by the General Contractor.

C. Cutting and patching of concrete floors and decks shall be performed in a neat and workmanlike manner, using a coring machine. Openings over 6 inch diameter must be formed by the subcontractor for such Work. After coring, each subcontractor shall pack and grout openings around sleeves or Work penetrating the floor of deck which he is furnishing.

D. No Contractor shall do cutting that may impair the strength of the building or its components. No holes except for small screws or bolts may be drilled in the beams or other structural members for the purpose of supporting, routing, or attaching Work without obtaining prior approval from the Architect.

E. Work shall be done in a neat manner by mechanics skilled in their trades, and the final Work shall be subject to approval by the General Contractor, Architect, and the Owner.

F. Each subcontractor shall do his own cutting and patching Work. This shall include cutting and patching required to install new utilities on the site.

G. Refer to other sections of these Specifications for specific cutting and patching requirements and limitations applicable to individual units of Work.

H. Unless otherwise specified, requirements of this Section apply to Mechanical and Electrical Work. Refer to Division 15 and Division 16 Sections, for additional requirements and limitations.

1.4 SUBMITTALS

A. Submit written request in advance of cutting or alteration which affects:
1. Structural integrity of any element of Project.
2. Integrity of weather exposed or moisture resistant element.
3. Efficiency, maintenance, or safety of any operational element.
4. Visual qualities of sight exposed elements.
5. Work of Owner or separate contractor.

B. Procedural Proposal for Cutting and Patching: Where prior approval of cutting and patching is required, submit proposed procedures for Work to be performed and request approval to proceed. Include the following information, as applicable, in the submittal:
1. Describe nature of the work and how it is to be performed, indicating why cutting and patching cannot be avoided. Describe anticipated results of the work in terms of changes to existing work, including structural, operational, and visual changes as well as other significant elements.
2. List of products to be used and firms that will perform Work.
3. Give dates when Work is expected to be performed.
4. List utilities that will be disturbed or otherwise be affected by Work, including those that will be relocated and those that will be out of service temporarily. Indicate how long utility service will be disrupted.
5. Approvals by the Architect/Engineer to proceed with cutting and patching Work does not waive the Architect/Engineer's right to later require complete removal and replacement of Work found to be cut and patched in an unsatisfactory manner.

C. Should conditions of Work or schedule indicate change of materials or methods, submit recommendation to the Architect, through the General Contractor, indicating:
   1. Condition indicating change.
   2. Recommendation for alternative materials or methods.
   3. Submittals as required for substitutions.

D. Submit written notice to Architect or General Contractor designating time Work will be uncovered, to provide for Architect observation.

1.5 PAYMENT FOR COSTS

A. Costs caused by ill-timed or defective work, or work not conforming to Contract, including costs for additional services of the Architect shall be paid by the party responsible for ill-timed, rejected or nonconforming Work.

PART 2 PRODUCTS

2.1 MATERIALS

A. General: Except as otherwise indicated, or as directed by the Architect/Engineer, use materials for cutting and patching that are identical to existing materials. If identical materials are not available, or cannot be used, use materials that match existing adjacent surfaces to the fullest extent possible with regard to visual effect. Use materials for cutting and patching that will result in equal or better performance characteristics.

B. For replacement of Work removed: comply with Technical Specification Sections for type of Work to be performed.
   1. Primary Products: Those required for original installation.
   2. Product Substitution: For any proposed change in materials, submit request for substitution described in Section 01600

PART 3 EXECUTION

3.1 INSPECTION

A. Before cutting, examine the surfaces to be cut and patched and the conditions under which the Work is to be performed. If unsafe or otherwise unsatisfactory conditions are encountered, take corrective action before proceeding with the Work.
   1. After uncovering existing Work, assess conditions affecting performance of work.
   2. Beginning of cutting or patching means acceptance of existing conditions.

3.2 PREPARATION

A. Protect other Work during cutting and patching to prevent damage. Provide protection from adverse weather conditions for that part of the project that may be exposed during cutting and patching operations.
   1. Avoid interference with use of adjoining areas of interruption of free passage to adjoining areas.
   2. Provide temporary supports to ensure structural integrity of the Work. Provide devices and methods to protect other portions of Project from damage.
   3. Provide protection from elements for areas which may be exposed by uncovering work.
   4. Maintain excavations free of water.

B. Take precautions not to cut existing pipe, conduit.

3.3 PERFORMANCE

A. General: Employ skilled workmen to perform cutting and patching Work. Except as otherwise indicated or as approved by Architect/Engineer, proceed with cutting and patching at the earliest feasible time and complete Work without delay.

C. Cutting: Cut the Work using methods that are least likely to damage Work to be retained or adjoining Work.
   1. Comply with requirements of applicable Sections of Division 2 where cutting and patching requires excavating and backfilling.
   2. Execute cutting and fitting to complete the Work.
   3. Uncover work to install improperly sequenced work.
   4. Remove and replace defective or non-conforming work.
   5. Remove samples of installed work for testing [when requested].
   6. Provide openings in the Work for penetration of mechanical and electrical work.
   7. Employ original installer to perform cutting for weather exposed and moisture resistant elements, and sight exposed surfaces.
   8. Cut rigid materials using masonry saw or core drill. Pneumatic tools not allowed without prior approval.

D. Patching: Patch with seams which are durable and as invisible as possible. Comply with specified tolerances for the Work.
   1. Where feasible, inspect and test patched areas to demonstrate integrity of work.
   2. Restore exposed finishes of patched areas and where necessary extend finish restoration into retained adjoining Work in a manner which will eliminate evidence of patching and refinishing.
   3. Employ original installer to perform patching for weather exposed and moisture resistant elements, and sight exposed surfaces.
   4. Restore work with new Products in accordance with requirements of Contract Documents.

5. Fit work airtight to pipes, sleeves, ducts, conduit, and other penetrations through surfaces.
6. At penetrations of fire rated walls, partitions, ceiling, or floor construction, completely seal voids with fire rated material in accordance with applicable code requirements, to full thickness of the penetrated element.
7. Refinish surfaces to match adjacent finish. For continuous surfaces, refinish to nearest intersection or natural break. For an assembly, refinish entire unit
8. Where removal of walls or partitions extends one finished area into another finished area, patch and repair floor and wall surfaces in the new space to provide an even surface of uniform color and appearance. If necessary, to achieve uniform color and appearance, remove existing floor and wall coverings and replace with new materials.

END OF SECTION

PART 1 GENERAL

1.1 RELATED WORK

A. The Work of this Section shall be included as a part of the Contract Documents of the Contractor on this Project.

1.2 SUMMARY

A. The Architect reserves the right to act on behalf of the Owner pertaining to the clean-up responsibilities that are a part of the Contractor's Work.

B. Related Work Specified Elsewhere
1. Section 01770 - Closeout Procedures.
2. Special cleaning requirements for specific construction elements are included in appropriate sections of Divisions 2 through 16.

1.3 PURPOSE - DAILY CLEANING

A. Define and emphasize the responsibility of the Contractor to remove his rubbish and debris from the construction site to guard against fire and safety hazards as well as to provide a more efficient construction operation for all Contractors. <u>If this cleaning is not performed to the satisfaction of the Owner and the Architect, it will be performed for the Contractor at his expense, cost of which will be deducted by Change Order prior to final payment</u>.

1.4 PURPOSE - ROUTINE CLEANING

A. Each Friday afternoon, and more often if necessary, the Contractor shall perform an overall clean-up of the entire site, including a broom cleaning of appropriate surfaces. The trades shall remove their rubbish and debris from the building site to the rubbish collection location promptly upon its accumulation and in no event later than the Contractor's regular Friday general clean-up.

1.5 RUBBISH CONTAINMENT

A. Refer to Section 01500 - Temporary Facilities and Controls for requirements.

1.6 SAFETY REQUIREMENTS

A. Hazards Control
1. Store volatile wastes in covered metal containers and remove from premises daily.
2. Prevent accumulation of wastes which create hazardous conditions.
3. Provide adequate ventilation during use of volatile or noxious substances.

B. Conduct cleaning and disposal operations to comply with local ordinances and anti-pollution laws.
   1. Do not burn or bury rubbish and waste materials on project site.
   2. Do not dispose of volatile wastes such as mineral spirits, oil, or paint thinner in storm or sanitary drains.
   3. Do not dispose of wastes into streams or waterways.

PART 2 PRODUCTS

2.1 MATERIALS

A. Use only cleaning materials recommended by manufacturer of surface to be cleaned.
   1. Do not use cleaning agents that are potentially hazardous to health or property or that might damage finish surface.

B. Use cleaning materials only on surfaces recommended by cleaning material manufacturer.

PART 3 EXECUTION

3.1 DAILY CLEANING

A. Contractor shall execute cleaning to ensure that building, grounds, and public properties are maintained free from accumulations of waste materials and rubbish.

B. Wet down dry materials and rubbish to lay dust and prevent blowing dust.

C. Daily, during progress of work, clean site and public properties and dispose of waste materials, debris, and rubbish in dumpster type rubbish container provided under this Section.

D. Handle materials in a controlled manner with as few handlings as possible; do not drop or throw materials from heights.

E. Schedule cleaning operations so that dust and other contaminants resulting from cleaning process will not fall on wet, newly painted surfaces.

F. Place no new work on dirty surfaces.

3.2 ROUTINE CLEANING

A. Employ experienced workmen for cleaning.

B. Remove dirt, mud, and other foreign materials from sight exposed interior and exterior surfaces.

C. Weekly, or at more frequent intervals if work activities justify same, perform the following cleaning. This includes all dirt, dust, and debris not identifiable as part of a Contract. Broom clean floor and paved surfaces; rake clean other surfaces of ground.

D. Maintain cleaning throughout the duration of the Project.

3.3 FINAL CLEANING

A. General: Provide final cleaning operations when indicated. Employ experienced workers or professional cleaners for final cleaning. Clean each surface or unit of work to the condition expected from a commercial building cleaning and maintenance program. Comply with manufacturer's instructions.

B. Contractor shall perform his respective final clean-up and shall leave the Work of the completed Project in clean, neat condition.

C. The following are examples, but not by way of limitation, of cleaning levels required:

1. Remove labels which are not required as permanent labels.
2. Clean transparent materials, including mirrors and window/door glass to a polished condition, removing substances which are noticeable as vision-obscuring materials. Replace broken glass and damaged transparent materials.
3. Clean exposed exterior and interior hard-surfaced finishes, to a dirt-free condition, free of dust, stains, films, and similar noticeable distracting substances. Except as otherwise indicated, avoid disturbance of natural weathering of exterior surfaces. Restore reflective surfaces to original reflective condition.
4. Wipe surfaces of mechanical and electrical equipment clean, including elevator equipment and similar equipment; remove excess lubrication and other substances.
5. Remove debris and surface dust from limited-access spaces including roofs, plenums, shafts, trenches, equipment vaults, manholes, attics, and similar spaces.
6. Clean concrete floors in unoccupied spaces broom clean.
7. Vacuum clean carpeted surfaces and similar soft surfaces.
8. Clean plumbing fixtures to a sanitary condition, free of stains, including those resulting from water exposure.
9. Clean light fixtures and lamps so as to function with full efficiency.
10. Clean project site (yard and grounds), including landscape development areas of litter and foreign substances. Sweep paved areas to a broom-clean condition; remove stains, petro-chemical spills, and other foreign deposits. Rake grounds, which are neither planted nor paved, to a smooth, even textured surface.

11. Sweep paved areas broom clean. Rake grounds that are neither planted nor paved to a smooth, even textured surface.
12. Remove petrochemical spills, stains, and other foreign deposits.
13. Remove tools, construction equipment, machinery, and surplus material from the site.

D. Removal of Protection: Remove temporary protection and facilities installed during construction to protect previously completed installations during the remainder of the construction period.

E. Compliances: Comply with governing regulations and safety standards for cleaning operations. Remove waste materials from the site and dispose of lawfully.

END OF SECTION

PART 1 GENERAL

1.1 RELATED DOCUMENTS

A. The Work of this Section shall be included as a part of the Contract Documents of the Contractor on this Project.

B. Refer to the General and Supplementary Conditions of the Contract for Substantial Completion and final payment.

1.2 SUMMARY

A. Closeout is hereby defined to include general requirements near end of Contract Time in preparation for final acceptance, final payment, normal termination of contract, occupancy by Owner, and similar actions evidencing completion of the Work. Specific requirements for individual units of Work are specified in the Project Manual. Time of closeout is directly related to "Substantial Completion."

B. This Section includes administrative and procedural requirements for contract closeout including, but not limited to, the following:
1. Prerequisites to substantial completion
2. Prerequisites to final payment
3. Punch list (inspection procedures)
4. Correction of work period
5. Project record documents
6. Certification of code compliance
7. Maintenance and operating manuals
8. Instructions for the Owner's personnel

1.3 PREREQUISITES TO SUBSTANTIAL COMPLETION

A. General: Prior to requesting Architect/Engineer inspection for certification of Substantial Completion (for either entire Work or portions thereof), complete the following and list known exceptions in request:
1. In the Application for Payment that coincides with, or first follows, the date of Substantial Completion is claimed, show 100 percent completion for the Work claimed as substantially complete.
   a. Include supporting documentation for completion as indicated in those Contract Documents and a statement showing an accounting for changes to the Contract Sum.
   b. If 100 percent completion cannot be shown, include a list of incomplete items, the value of incomplete construction, and reasons the Work is not complete.
2. Advise Owner of pending insurance changeover requirements.
3. Submit specific warranties, workmanship/maintenance bonds, maintenance agreements, agreements, final certifications, and similar documents.

4. Obtain and submit releases enabling Owner's full and unrestricted use of the Work and access to services and utilities, including occupancy permits, operating certificates, and similar releases.
5. Submit record drawings, maintenance manuals, damage or settlement surveys, property survey, and similar final record information.
6. Deliver tools, spare parts, extra stocks of materials, and similar physical items to Owner.
7. Make final changeover of locks and transmit keys to Owner and advise Owner's personnel of changeover in security provisions.
8. Complete start-up testing of systems and instructions of Owner's operating/maintenance personnel. Discontinue and remove from project site temporary facilities and services, along with construction tools, mock-ups, and similar elements.
9. Complete final cleaning-up requirements. Refer to Section 01740 - Construction Cleaning.
10. Touch up and otherwise repair and restore marred, exposed finishes.

B. Inspection Procedures: On receipt of a request for inspection, the Architect will either proceed with inspection or advice the Contractor of unfilled requirements. The Architect will prepare the Certificate of Substantial Completion following inspection or advise the Contractor of construction that must be completed or corrected before the certificate will be issued.
1. The Architect will repeat inspection when requested and assured that the Work is substantially complete.
2. Results of the completed inspection will form the basis of requirements for final acceptance.

1.4 PREREQUISITES TO FINAL PAYMENT

A. General: Prior to requesting Architect/Engineer final inspection for certification of final payment, complete the following:
1. Submit an updated final statement, accounting for final additional changes to the Contract Sum.
2. Submit final payment request with releases and supporting documentation not previously submitted and accepted. Include insurance certificates for products and complete operations where required.
3. Submit copy of Architect/Engineer final punch list of itemized work to be completed or corrected, stating that each item has been completed or otherwise resolved for acceptance.
4. Submit record drawings, maintenance manuals, and similar final record information.
5. Certification of code compliance.
6. Submit certification stating that no materials containing asbestos were incorporated into the Work.
7. Plumbing Contractor shall submit certification stating that no flux or solder used for drinking water piping contained more than 0.2 percent lead, and that no pipe or fittings used for drinking water piping contained more than 8.0 percent lead.

8. Firestopping Contractor's letter of certification stating that all firestopping systems have been installed in accordance with the Contract Documents.
9. Submit final meter readings for utilities, a measured record of stored fuel, and similar data as of the date of Substantial Completion or when the Owner took possession of and assumed responsibility for corresponding elements of the work.
10. Submit consent of surety to final payment.

11. Submit evidence of final, continuing insurance coverage complying with insurance requirements.
12. Submit a final liquidated damages settlement statement.
13. Final unconditional waiver of liens, prepared on AIA Documents G706, G706A, and G707.

B. Re-inspection Procedure: The Architect will re-inspect the work upon receipt of notice that the work, including inspection list items from earlier inspections, has been completed, except for items whose completion is delayed under circumstances acceptable to the Architect.
1. Upon completion of re-inspection, the Architect will prepare a certificate of final acceptance. If the work is incomplete, the Architect will advise the Contractor of work that is incomplete or of obligations that have not been fulfilled but are required for final acceptance.

PART 2 PRODUCTS (Not Applicable)

PART 3 EXECUTION

3.1 PUNCH LIST

A. Prior to the Architect's preparation of a Project Punch list, the Contractor shall prepare and keep his own punch list on the job for use by his employees and subcontractors and for use by the Architect to facilitate completion of the Work.

B. The Contractor's inspection shall be as thorough as possible, in accordance with his desire to provide first class workmanship and maintain good reputation, and shall include Work under his Contract, including that of his subcontractors.

C. The Architect shall observe the Work, providing Work on the Contractor's punch list has been completed, and prepare the Project Punch list for use by subcontractors to expedite proper completion of the Work.

D. The time fixed by the Architect for the completion of all items on the list accompanying the Certificate of Substantial Completion shall not be greater than 21 days. The Contractor shall complete items on the list within such 21 day period. The Contractor shall begin completion and correction activities within 7 days of receipt of the lists and complete all activities within the 21 day period specified. If the Contractor fails to do so, the Owner in its discretion may perform the Work by itself or others and the cost thereof shall be charged against the

Contractor. If more than one inspection by the Architect for the purpose of evaluating corrected work is required by the subject list of items to be completed or corrected, it will be performed at the Contractor's expense.

E. At the time the Architect commences the Substantial Completion Inspection, if the Architect discovers excessive additional items requiring completion or correction, the Architect may decline to continue the inspection, instructing the Contractor as to the general classification of deficiencies which must be corrected before the Architect will resume the Substantial Completion Inspection. If the Contractor fails to pursue the Work so as to make it ready for Substantial Completion Inspection in a timely fashion, the Architect shall, after notifying the Contractor, conduct inspections and develop a list of items to be completed or corrected. This list of items shall be furnished to the Contractor who shall proceed to correct such items within 21 days. The Architect will conduct additional inspections as required to determine that the Work is ready for Substantial Completion Inspection. The Architect will invoice the Owner for 1) The cost of inspections between the termination of the initial Substantial Completion Inspection and the commencement of the satisfactory Substantial Completion Inspection, 2) The cost of inspection or review after the 21 day period established for the completion of the list by the Contractor. The Contractor shall reimburse the Owner for such cost, and the Owner may offset the amounts payable to the Architect for such services from the amounts due the Contractor under the Contract Documents.

3.2 CORRECTION OF WORK PERIOD (WARRANTY)

A. Prior to the expiration of the one year correction of work period (warranty), the Architect will check to see if additional Work by the Contractor is needed to make good on the warranties. An itemized list will be furnished to the Contractor for corrective or replacement work.

B. This Work shall be completed immediately by the Contractor after receiving notification.

3.3 PROJECT RECORD DOCUMENTS

A. Project Record Documents include drawings, project manual, project data, and samples.

B. The Contractor shall update "Project Record Documents" on separate blue or black line prints set aside especially for this purpose on the job. Drawings shall incorporate all changes made in the Work of the respective trades during the construction period. Such changes shall be indicated at the time they occur.
   1. Accurately record information in an understandable drawing technique.
   2. Record data as soon as possible after obtaining it. Record and check markup prior to enclosing concealed installations.

C. Maintain at the jobsite one copy of Drawings, Project Manual, addenda, final shop drawings, change orders, field orders, other contract modifications, and other documents submitted by the Contractor, in compliance with various Sections of the Project Manual.

D. Each of these project record drawings shall be clearly marked "Project Record Document"; maintained in good condition; available for observation by the Architect; and shall not be used for construction purposes. Mark these drawings to show the actual installation where the installation varies from the installation shown originally. Give particular attention to information on concealed elements that would be difficult to identify or measure and record later. Items required to be marked include, but are not limited to, the following:

1. Dimensional changes to the Drawings.
2. Significant detail not shown in the original Contract Documents including Change Orders or Construction Change Directives.
3. The location of underground utilities and appurtenances dimensionally referenced to permanent surface improvements.
4. The location of internal utilities and appurtenances concealed in building structures, referenced to visible and accessible features of the structures.
5. When elements are placed exactly as shown on Drawings, so indicate; otherwise show changed location.
6. Revisions to details shown on the Drawings.
7. Depths of foundations below the first floor.
8. Revisions to routing of piping and conduits.
9. Revisions to electrical circuiting.
10. Actual equipment locations.
11. Duct size and routing.
12. Changes made following the Architect’s written orders.
13. Details not on original Contract Drawings.
14. Charts and locations of concealed work.
    a. The Plumbing and HVAC Contractors shall prepare a suitable chart identifying and locating each concealed control or other concealed item requiring repair, adjustment, and maintenance. Charts shall be mounted in suitable frames with glass covers secured to wall where directed.
    b. Charts shall list each item, together with its function, item number, and location.
    c. Locations throughout the building shall be identified on the wall or ceiling by permanent, non-obstructive plates, labels, or other approved means secured in a permanent manner.
    d. Chart details, identification methods, locations, and methods of attachment shall be as approved by the Architect's representative at the jobsite upon full submission of proposed procedures and proper execution of same.

E. Keep project record documents current. Do not permanently conceal work until the required information has been recorded. Mark record prints of Contract Drawings or Shop Drawings, whichever is most capable of showing actual physical conditions, completely and accurately. Where shop drawings are marked, show cross reference on Contract Drawings location.

1. Mark record sets with red, or color that may be photo copied, erasable colored pencil. Use other colors (no blue) to distinguish between changes for different categories of the work at the same location.
2. Note Construction Change Directive numbers, alternate numbers, change order numbers, and similar identification.

F. During the construction period, maintain one copy of the Project Manual, including addenda and modifications issued, for Project Record Documents purposes.
   1. Mark the Specifications to indicate the actual installation where the installation varies from that indicated in Specifications and modifications issued. Note related project record drawings information, where applicable. Give particular attention to substitutions, selection of product options, and information on concealed installations that would be difficult to identify or measure and record later.
      a. In each Specification Section where products, materials, or units of equipment are specified, indicate whether record product data has been submitted in maintenance manual instead of submitted as record product data.

G. During the construction period, maintain 3 copies of each product data submittal for Project Record Document purposes.
   1. Mark product data to indicate the actual product installation where the installation varies substantially from that indicated in project data submitted. Include significant changes in product delivered to the site and changes in manufacturer's instructions and recommendations for installation.
   2. Give particular attention to information on concealed products and installation that cannot be readily identified and recorded later.
   3. Note related Change Orders and markup of record drawings, where applicable.
   4. Where record product data is required as a part of maintenance manuals, submit marked up product data as an insert in the manual instead of submittal as record product data.

H. Record Sample Submittal: Immediately prior to date of Substantial Completion, meet with the Architect and Owner's personnel at the site to determine which of the samples maintained during the construction period shall be transmitted to the Owner for record purposes. Comply with the Architect's instructions for packaging, identification marking, and delivery to the Owner's samples storage space. Dispose of other samples in a manner specified for disposing samples and waste materials.

I. Prior to Final Payment, submit to the Architect final Record Documents ("As-Builts") in the form of two (2) bond copies after transposition of all Record Document changes into the Drawings (note that all Drawing changes shall be "clouded") and Specifications (note that all Specification changes shall be "bolded and underlined") for the Owner's permanent record.
   1. Each drawing shall be labeled "As-Built", dated and signed by the Contractor.

3.4 CERTIFICATION OF CODE COMPLIANCE

A. Prior to final payment the subcontractors indicated below shall submit through the General Contractor to the Architect (in duplicate) letters of certification of code compliance as follows:
   1. The Subcontractor for Division 15 Work shall submit letter certifying mechanical installations comply with the current applicable editions of the State and Local Codes having jurisdiction.
   2. The Subcontractor for Division 16 Work shall submit letters certifying that the electrical wiring, alarm systems, smoke and heat detection systems comply with current applicable editions of the State and Local Codes having jurisdiction.

3.5 MAINTENANCE AND OPERATING MANUALS

A. At the time of Contractor's pay application reaches 75 percent complete, the Contractor shall submit to the Architect one copy of a rough draft for a comprehensive Maintenance and Operating Manual presenting complete directions and recommendations for the proper care and maintenance of visible surfaces as well as maintenance and operating instructions for equipment items which he has provided.

B. Operating instructions shall include necessary printed directions for correct operations, adjustment, servicing, and maintenance of movable parts. Also included shall be suitable parts lists, final shop drawings, and diagrams showing parts location and assembly, and information specified in individual Specification Sections and the following:
1. Emergency instructions.
2. Copies of specific warranties.
3. Wiring diagrams.
4. Recommended maintenance procedures and turn around times.
5. Inspection and system test procedures.
6. Precautions against improper maintenance and exposure.

C. Upon Architect's approval and prior to issuance of final payments, the Contractor shall submit three (3) corrected and completed copies of maintenance manuals to the Architect.
1. If the project is being constructed in Phases, provide Maintenance and Operating Manuals at the completion of each Phase of Work.

D. Finished manuals shall be loose-leaf type with hardboard covers and titled tabs identifying each particular portion or item of the Work.

E. For each titled item or work portion, manual must provide the names, addresses, and phone numbers of the following parties:
1. Contractor/installer
2. Manufacturer
3. Nearest dealer/supplier
4. Nearest agency capable of supplying parts and service

F. For each manual label on front cover or spine shall indicate the following information:
1. Project name and address
2. Owner's name
3. Name and address of Architect
4. Name and address of Contractor
5. Date of submission

3.6 INSTRUCTIONS FOR THE OWNER'S PERSONNEL

A. Arrange for each Installer of equipment that requires regular maintenance and noted in technical sections, to meet with the Owner's personnel to provide instruction in proper operation and maintenance. Provide instruction by manufacturer's representatives if Installers are not experienced in operation and maintenance procedures. Include a detailed review of the following items:
1. Maintenance manuals
2. Record documents
3. Spare parts and materials
4. Tools
5. Lubricants
6. Fuels
7. Identification systems
8. Control sequences
9. Hazards
10. Cleaning
11. Warranties and bonds
12. Maintenance agreements and similar continuing commitments

B. As part of instruction for operating equipment, demonstrate the following procedures:
1. Startup
2. Shutdown
3. Emergency operations
4. Noise and vibration adjustments
5. Safety procedures
6. Economy and efficiency adjustments
7. Effective energy utilization

END OF SECTION

PROJECT CLOSEOUT DOCUMENTATION CHECKLIST

A/R/C Associates, Incorporated
601 North Fern Creek Avenue, Suite 100
Orlando, FL 32803
407-896-7875 FAX 407-898-6043

PROJECT:	**First Coast Technical College, Bldg. B**	**OWNER'S PROJECT NO.**	**2020-35**	**A/R/C PROJECT NO.**	**20021.00**

CONTRACTOR:	

Closeout Submittal Checklist

Substantial Completion

1- Request for Substantial Completion Inspection (email or letter submitted by Contractor ☐
2- "Certification of Substantial Completion" – **AIA Doc G704** (by Architect Owner) ☐
3- Documentation for any Change Order cost or time adjustments ☐
4- Documentation for Owner Direct Purchases letter ☐

Final Completion

1- Contractor's Certification of Contract Completion (letter submitted by Contractor) ☐
2- "Certificate of Final Completion" (issued by Architect and Owner) ☐

Record Documents

1- Drawings (Marked up Plans Indicating As-Built Conditions) ☐
2- Specifications ☐
3- Addenda ☐
4- Change Orders and Other Modification Directives ☐
5- Submittals (Shop Drawings, Product Data and Samples) ☐
6- Manufacturer's Instructions for Assembly, Installation and Adjusting (As Applicable) ☐
7- Asbestos Containing Roof Materials (ACRM) Documents Permits (As Applicable) ☐
8- UL "Letter of Findings" (Lightning Protection) (As Applicable) ☐
9- Operation and Maintenance Data (As Applicable) ☐
10- Spare Parts and Maintenance Materials (As Applicable) ☐

Warranties

1- Manufacturer's Warranty – Submit Manufacturer's NDL Warranty (& Riders as Req'd) ☐
<u>Provide Warranty for each roof system installed</u> ☐
2- Applicator's Warranty (Submit Warranty Form(s) include in Project Manual) ☐
3- Other Applicable Material and Labor Warranties ☐

Final Application for Payment

1- Final Application and Certificate for Payment – **AIA Document G702** ☐
2- Contractor's Affidavit of Payment of Debts and Claims – **AIA Document G706** ☐
3- Consent of Surety To Final Payment – **AIA Document G707** ☐
4- Contractor's Affidavit of Release of Liens – **AIA Document G706A** ☐
5- Subcontractor and Supplier Final Lien Waivers ☐

PART 1 GENERAL

1.1 SUMMARY

A. Section Includes:
1. Existing Project and Site Conditions observed by A/R/C Associates.
2. Bidder Responsibility to verify existing conditions.
3. OMG Pull Test Report
4. Roof / Ceiling Assembly Thermal Resistance Calculations.
5. Internet link to field investigation photographs by A/R/C Associates.

B. Related Sections:
1. Section 01110 – Summary of Work

1.2 EXISTING PROJECT / SITE CONDITIONS

A. Key Plan: The Roof Area numbers are indicated in the Specifications and on the Drawings. The Key Plan also indicates assumed deck types as a reference only and is shown on drawing A01.

B. Existing roof assembly data and related information shown on drawing A01 is provided for the convenience of the contractor and is based on our field investigation and review of the record documents available from the Owner.

C. Field Investigation: A field investigation was conducted by A/R/C Associates, Incorporated on **January 24, 2020,** during which time the exposed conditions were observed. Limited existing construction record drawings and specifications were available for A/R/C to verify. The details of the project indicated, and existing conditions are based on typical construction practices. A/R/C offers no assurance that all varying conditions have been discovered, or that any Owner furnished information is completely accurate. It shall be the responsibility of each bidder to make additional inspections as they may judge to be a necessity.

1. During the January field investigation, our office performed roof cores and fastener withdrawal tests with OMG Roofing Products at the various roof levels in an effort to understand the roof system composition and condition, ten (10) withdrawal tests were performed.
2. Our office also took numerous photographs of the various conditions for reference during our design process, those are also being made accessible through a website, the link for which is:

https://www.dropbox.com/sh/daqd7jyzxvysogi/AACKH8kbQ3NeBcv6iCHEwF9ea?dl=0

3. As part of the design development of this project, A/R/C Associates, Inc. has calculated the thermal resistance of the roof / ceiling assembly for each roof area over conditioned interior space. One (1) page of these calculations have been attached to this section for the contractor's information.

D. Verification of Dimensions: The approximate dimensions shown for each roof area are the result of reconstruction of the building design from field measurements taken by A/R/C Associates. This information is given to assist prospective Bidders in establishing the approximate scope of the project. As a prerequisite for bidding the project, however, all dimensions shall be field verified by each Bidder so that the dimensions and areas utilized in bidding the project will be confirmed or corrected by the Bidder.

E. Condition of Structure:
1. The Owner assumes no responsibility for actual condition of the structure.
2. Conditions existing at time of inspection for bidding purposes will be maintained by Owner in so far as practicable. However, variations may occur due to the Owner's ongoing operations.
3. Prior to bidding, inspect and verify visible existing conditions of Project, including elements subject to damage or to movement during reroofing.
   a. Conflicts and problems shall be reported to the Architect for resolution prior to bidding.
   b. Failure to report these conflicts places the responsibility on the Prime Contractor to complete the work in accordance with the Documents at no additional cost to the Owner.
4. During construction, inspect conditions affecting installation of Products, or performance of work.
   a. Report unsatisfactory or questionable conditions to Architect in writing; do not proceed with work until Architect has provided further instructions.

PART 2 PRODUCTS (Not Applicable)

PART 3 EXECUTION (Not Applicable)

END OF SECTION

OMG ROOFING PRODUCTS
153 BOWLES ROAD
AGAWAM, MA 01001
413·789·0252
800·633·3800
FAX: 413·789·1069
WWW.OLYFAST.COM

February 10, 2020

Troy Howe
A/R/C Associates Inc.
601 North Fern Creek Ave Suite 100
ORLANDO, FL 32803

Re: First Coast Technical College Building B

Dear Troy,

I have enclosed the Job Report Number PT-06339 from the job referenced above. The report was recorded by Kaleb Rowland, OMG Technical Service Representative.

OMG is interested in your feedback on our services. Please visit www.omglistens.com to take a brief, 2-3 minute survey to help us understand how we did on this project, and more importantly, anything we can do better next time. We value your time and input, and thank you in advance for your participation.

If you have any further questions, please feel free to call.

Sincerely,

Stephen Childs

Stephen Childs
OMG Technical Support

To: troy.howe@arc-arc.com; krowland@omginc.com

Pull Test Report

Job Name	First Coast Technical College Building B
Job Location	St. Augustine, FL
Roof Area (sqft)	20,000
Building Height (ft)	20'
Project Type	Re-roof
Thickness of Existing Roof Assembly	8"
Roof Cover Type	M/A Single Ply
New System Manufacturer	Johns Manville
Fastener(s) Tested	High Load

Report Number	PT-06339
Test Date / Time	2/7/2020 11:00:00 AM
Ambient Temperature	65°F
Tester Manufacturer	DMD Force-2000
Max Cap of Tester (lbs)	2,000
Test Performed By	Kaleb Rowland
Test Cut Area Repaired By	Troy Howe
Test Witnessed By	Troy Howe

Insulation Manufacturer	Insulation Type	Thickness
Johns Manville	Cover Board	1/2"

Deck Type	Thickness
Steel	22 ga.

Disclaimer: Manufacturer's installation requirements shall be followed when using any of the tested fasteners or adhesives. Neither the technician performing the pullout tests, nor his/her company is responsible for the waterproofing integrity of the repairs. This test report does not certify the structural integrity of the roof deck.

Test Results

Test Location Number	Pull Value (lbf)	Fastener Tested	Penetration (in)	Bit Diameter (in)	Comments
1	199	Johns Manville High Load	1"		
2	462	Johns Manville High Load	1"		
3	392	Johns Manville High Load	1"		
4	207	Johns Manville High Load	1"		
5	441	Johns Manville High Load	1"		
6	510	Johns Manville High Load	1"		
7	465	Johns Manville High Load	1"		
8	504	Johns Manville High Load	1"		
9	312	Johns Manville High Load	1"		
10	367	Johns Manville High Load	1"		

Roof Image/Diagram

First Coast Technical College Building B

N

END OF REPORT

Architecture
Roof Consulting
Construction Technology
AA C000932

A/R/C Associates Incorporated

601 North Fern Creek Avenue
Suite 100
Orlando, Florida 32803-4899
(407) 896-7875
FAX (407) 898-6043

Project Name: SJSD – First Coast Technical College – Building "B" Project No.: 20021.00

Main Roof Area

	Material	Resistance	(E)xisting	(P)roposed
1.	**Outside Surface (air film)**			
	Winter-Heat Flow Up-Wind 15 mph	**0.17**	_____	_____
	Summer-Heat Flow Down-Wind 7 ½ mph	**0.25**	0.25	0.25
2.	**New Single-ply Thermoplastic Roofing**	**0.12**	_____	0.12
3.	**Roof Insulation**			
a.	Perlite: _____x 2.8 R/Inch		_____	_____
b.	Isocyanurate: 1.3" (Proposed Minimum) – (mfr. data)			7.40
c.	Other: (Add) ¼" Gypsum cover Board	**0.20**	_____	0.20
4.	**Existing Roof – Single Ply Thermoplastic**	**0.12**	0.12	_____
	One Layer No. 43 coated base sheet	**0.06**	_____	_____
5.	**Roof Deck/Materials**			
a.	2" Cementitious Wood Fiber (Tectum): x 3.68 R/Inch		_____	_____
b.	Gypsum Concrete: _____ x .60 R/Inch		_____	_____
	Gypsum Form Board:_____ x .90 R/Inch		_____	_____
	Fiberglass Form Board:_____x 4.0 R/Inch		_____	_____
c.	Lightweight Insulating Concrete:		_____	_____
	1:4 mix: 2.00" x 1.11 R/Inch		2.22	2.22
	1:6 mix: _____x 1.315 R/Inch		_____	_____
	Styrofoam: 4.00" x 4.0 R/Inch		16.00	16.00
d.	Wood Decks			
	2" Nominal Plank (1 ½ ")	**1.89**	_____	_____
	1" Nominal Plank (¾ ")	**0.94**	_____	_____
	¾" Plywood	**0.93**	_____	_____
	½" Plywood	**0.62**	_____	_____
f.	Steel Deck	**0.00**	_____	_____
6.	**Dead Air Space-Not Vented**	**0.00**	0.00	0.00
7.	**Ceiling**			
a.	Suspended Acoustical Lay-in	**1.50**	1.50	1.50
b.	Plaster Board – ¾"	**0.68**	_____	_____
c.	Plaster Board – ½"	**0.45**	_____	_____
d.	Plaster/Metal Lath – ¾"	**0.47**	_____	_____
8.	**Inside Surface – Still Air (air film)**			
	Winter-Heat Flow Up	**0.61**	_____	_____
	Summer–Heat Flow Down	**0.92**	0.92	0.92
		R_T	21.01	28.61
		R_{ci}	18.34*	25.94*

* In the new 2017 Florida Building Code (Energy Conservation), Chapter 4 limits insulation R-Value calculations to above deck materials only and requires that the new minimum insulation thickness be calculated to be R-25ci (Continuous Insulation) minimum for new roofing. Other R-Value information is shown, but to be code compliant, only relevant R-Value information is added together to demonstrate code compliance to the new standards.

PART 1 GENERAL

1.1 SECTION INCLUDES

A. Demolition of designated roofing and removal of materials from site.

B. Miscellaneous demolition as noted by the drawings and details.

1.2 RELATED SECTIONS

A. Division 01 - General Requirements

1.3 QUALIFICATIONS

A. Demolition Firm: Company specializing in performing the Work of this Section with minimum five years documented experience.

1.4 REGULATORY REQUIREMENTS

A. Conform to applicable code for demolition of roofing, safety of adjacent structures, dust control and disposal.

B. Notify affected utility companies before starting work and comply with their requirements.

C. Do not close or obstruct roadways, sidewalks, and hydrants without permits.

D. Conform to applicable regulatory procedures when hazardous or contaminated materials are present.

1.5 SCHEDULING

A. Schedule work under the provisions of Division 01, Section 01320.

B. Schedule Work to coincide with new reroofing work.

C. Describe demolition removal procedures and schedule.

1.6 PROJECT CONDITIONS

A. Existing Conditions
   1. Report conflicts or problems to the Project Construction Manager and Architect for resolution prior to Bidding. Failure to report these conflicts and problems places the responsibility on the Contractor to complete the work in accordance with the Documents at no additional cost to the Owner.

PART 2 PRODUCTS (Not Used)

PART 3 EXECUTION

3.1 PREPARATION

A. Provide, erect, and maintain temporary barriers and security devices.

B. Protect existing landscaping materials, appurtenances, structures and adjacent roofs which are not to be demolished.

3.2 DEMOLITION REQUIREMENTS

A. Conduct demolition to minimize interference with adjacent structures and occupants.

B. Cease operations immediately if adjacent structures appear to be in danger. Notify Architect. Do not resume operations until directed.

C. Conduct operations with minimum interference to public or private accesses. Maintain egress and access at all times.

3.3 DEMOLITION

A. Remove demolished materials from site.

B. Do not burn or bury materials on site. Leave site in clean condition.

C. Remove temporary work.

D. Remove materials to be re-installed or retained in manner to prevent damage. Store and protect in accordance with requirements of Division 01.

END OF SECTION

PART 1 GENERAL

1.1 SUMMARY

A. Section Includes:
1. Shop fabricated aluminum exterior wall ladders and related items.
2. Drawings and general provisions of the Contract, including General and Supplementary Conditions and Division - 01 Specification sections, apply to work of this section.

1.2 REFERENCES

A. ASTM– American Society for Testing and Materials
1. ASTM B 209 - Standard Specification for Aluminum and Aluminum-Alloy Sheet and Plate.
2. ASTM B 221 - Standard Specification for Aluminum and Aluminum-Alloy Extruded Bars, Rods, Wire, Profiles, and Tubes.
3. ASTM B 241 - Standard Specification for Aluminum-Alloy Seamless Pipe and Seamless Extruded Tube.
4. ASTM E 985 - Standard Specification for Permanent Metal Railing Systems and Rails for Buildings.

B. AAMA - American Architectural Manufacturers Association
1. 611 - Voluntary Specification for Anodized Architectural Aluminum.
2. 2603 - Voluntary Specification, Performance Requirements and Test Procedures for Pigmented Organic Coatings on Architectural Extrusions and Panels.
3. 2604 - Voluntary Specification, Performance Requirements and Test Procedures for High Performance Organic Coatings on Architectural Extrusions and Panels.
4. 2605 - Voluntary Specification, Performance Requirements and Test Procedures for Superior Performing Organic Coatings on Architectural Extrusions and Panels.

C. ANSI – American National Standards Institute
1. ANSI A14.3 - Ladders, Fixed, Safety Requirements

D. AWS - American Welding Society
1. AWS D1.2 - Structural Welding Code - Aluminum.

E. SSPC - Society for Protective Coatings
1. SSPC Painting Manual

1.3 DESCRIPTION OF WORK

A. Definition: Metal fabrications include items made from aluminum and/or steel shapes, plates, bars, strips, tubes, pipes and castings which are not a part of other structural metal systems specified elsewhere.

B. Types of work in this section include metal fabrications for:
1. Wall mounted ladders (aluminum).
2. Miscellaneous aluminum and/or steel fabrications.

1.4 SUBMITTALS

A. Submittals in accordance with Division 01 provisions.

B. Shop Drawings:
1. Indicate profiles, sizes, connection attachments, reinforcing, anchorage, size and type of fasteners, and accessories. Include erection drawings, elevations, and details where applicable.
2. Field Measurements: Take field measurements prior to preparation of shop drawings and fabrication, where possible. Do not delay job progress; allow for trimming and fitting where taking field measurements before fabrication might delay work.
3. Submit shop drawings for fabrication and erection of miscellaneous metal fabrications. Include plans, elevations and details of sections and connections. Show anchorage and accessory items. Provide templates for anchor and bolt installation by others.
4. Indicate welded connections using standard AWS A2.0 welding symbols. Indicate net weld lengths.

C. Welder Certificates
1. Submit Welder Certificates certifying welders employed on the Work, have been AWS qualified within the previous 12 months.

D. Shop Assembly:
1. Preassemble items in shop to greatest extent possible to minimize field splicing and assembly. Disassemble units only as necessary for shipping and handling limitations. Clearly mark units for reassembly and coordinated installation.

E. Samples: Typical Joint Sample finished in accordance with NOMMA Guideline #

1.5 QUALITY ASSURANCE

A. Finish joints in accordance with NOMMA Guideline 1.

B. Perform Work in accordance with good industry standards and the current Florida Building Code.

1.6 QUALIFICATIONS

A. Fabricator Qualifications: Minimum 10 years documented experience in work of this Section

B. Design ladders and railings under direct supervision of a Professional Engineer experienced in design of this type of work and licensed in the State of Florida.

C. Mockup:
1. Provide a mock-up of requested metal fabrications. Locate where directed.
2. Approved mockup may remain as part of the Work.

1.7 JOB CONDITIONS

A. Existing Conditions
1. This project involves metal fabrication work on existing building(s). Verify existing conditions and other fabrications visible conditions prior to bidding.
2. Report conflicts and problems to the Architect prior to bidding for resolution. Failure to report these conflicts and problems places the responsibility on the Contractor to complete the work in accordance with the Documents at no additional cost to the Owner.
3. Failure to install the work in strict accordance with provisions of this Section is subject to total rejection of work specified herein.

1.8 DELIVERY, STORAGE AND HANDLING

A. Store and handle products in accordance with the provisions of Division 01.

B. Accept metal fabrications on site in labeled shipments. Inspect for damage.

C. Protect metal fabrications from damage by exposure to weather.

1.9 FIELD MEASUREMENTS

A. Verify that field measurements are as indicated on approved shop drawings.

PART 2 PRODUCTS

2.1 MANUFACTURERS

A. Acceptable Manufacturers (fabricators)
1. ACL Industries, Inc – Aluminum Access Ladders
2. Superior Aluminum Products – Aluminum Pipe Railing
3. The Wagner Companies – Aluminum Pipe Railing

B. Substitutions are permitted under the provisions of Division 01

2.2 MATERIALS – GENERAL

A. Metal Surfaces, General: For fabrication of miscellaneous metal work which will be exposed to view, use only materials which are smooth and free of surface blemishes including pitting, seam marks, roller marks, rolled trade names and roughness.

2.3 MATERIALS – ALUMINUM

A. Extrusions: ASTM B221, 6063-T5 alloy and temper.

B. Sheet: ASTM B209, alloy and temper best suited to application.

C. Pipe: ASTM B241, extruded, anodizing quality, Schedule 40, 6063 aluminum pipe, temper T4

D. Base Flanges, anchors and railing accessories: ASTM B 247.
1. Manufacturer's standard 713 aluminum alloy cast bases or solid aluminum 6063 stock.

E. Fasteners: Provide concrete anchorage for fastening and complying with applicable codes and standards. All fasteners used in the system shall be aluminum or stainless steel.

F. Anchoring Grout: Non-shrink Portland cement-based hydraulic grout mixed and applied in accordance with manufacturer's instructions; gypsum based material is not acceptable.
1. Provide formulation that is resistant to erosion from water exposure without needing protection by a sealer or waterproof coating and that is recommended by manufacturer for exterior use.

2.4 MATERIALS – STEEL

A. Steel Plates, Shapes and Bars: ASTM A 36

B. Galvanized Structural Steel Sheet: ASTM A 446, of grade required for design loading. Coating designation shall be G90.

C. Brackets, Flanges and Anchors: Cast or formed metal of the same type material and finish as supported rails.

D. Concrete Inserts: Threaded or wedge type; galvanized ferrous castings, either malleable iron, ASTM A 47, or cast steel, ASTM A 27. Provide bolts, washers and shims as required, hot-dip galvanized, ASTM A 153

E. Galvanizing Repair Paint: High zinc dust content paint for re-galvanizing welds in galvanized steel, complying with the Military Specifications MIL-P-21035 (Ships) or SSPC-Paint-20

2.5 ACCESSORIES AND FASTENERS (ALL METALS)

A. General: Provide fasteners of the same material as the metal being fastened zinc-coated fasteners for exterior use or where built into exterior walls. Select fasteners for the type, grade and class required.

B. Bolts and Nuts: Regular hexagon head type, ASTM A 307, Grade A.

C. Lag Bolts: Square head type, FS FF-B-561.

D. Machine Screws: Cadmium plated steel, FS FF-S-92.

E. Wood Screws: Flat head carbon steel, FS FF-S-111.

F. Plain Washers: Round, carbon steel, FS FF-W-92.

G. Masonry Anchorage Devices: Expansion shields, FS FF-S-325.

H. Toggle Bolts: Tumble-wing type, FS FF-B-588, type, class and style as required.

I. Anchoring Cement – Non-shrink cementitious, non-metallic; Pre-mixed, factory packaged, non-staining, non-corrosive, non-gaseous grout. Provide grout specifically recommended by manufacturer for interior and exterior applications of type specified in this section.

2.6 FABRICATION

A. General:
1. Workmanship: Use materials of size and thickness indicated or, if not indicated, as required to produce strength and durability in finished product for use intended. Work to dimensions shown or accepted on shop drawings, using proven details of fabrication and support. Use type of materials shown or specified for various components of work.
2. Form exposed work true to line and level with accurate angles and surfaces and straight sharp edges. Ease exposed edges to a radius of approximately 1/32" unless otherwise shown. Form bent metal corners to smallest radius possible without causing grain separation or otherwise impairing work.
3. Weld corners and seams continuously, complying with AWS recommendations. At exposed connections, grind exposed welds smooth and flush to match and blend with adjoining surfaces.

4. Form exposed connections with hairline joints, flush and smooth, using concealed fasteners wherever possible. Use exposed fasteners of type shown or, if not shown, Phillips flat-head (countersunk) screws or bolts.
5. Provide for anchorage of type shown, coordinated with supporting structure. Fabricate and space anchoring devices to provide adequate support for intended use.
6. Provide for anchorage of type shown, coordinated with supporting structure. Fabricate and space anchoring devices to provide adequate support for intended use.
7. Fabricate joints which will be exposed to weather in a manner to exclude water or provide weep holes where water may accumulate.

B. Ladders: Aluminum.
1. Fabricate ladders for the locations shown, with dimensions, spacing, details and anchorages as indicated. Comply with the requirements of ANSI A 14.3 except as otherwise indicated.
2. Vertical ladder: provide 1.5" inside diameter continuous, schedule 40 aluminum tube side rails, spaced 20" apart.
3. Provide 1" diameter solid aluminum rungs, spaced 12" o.c.
4. Fit rungs into holes at centerline of side rails, weld and grind smooth all joints on outer rail faces.
5. Provide ladder platform of welded aluminum grating with pattern openings size of 2" x 2" on center maximum if shown in project details.
6. Support each ladder at top and at intermediate points spaced not more than 5'-0" o.c. Use welded aluminum brackets, designed for adequate support and anchorage, and to hold the ladder clear of the wall surface with a minimum of 7" clearance from wall to centerline of rungs. Provide 8” high (minimum) bottom brackets with two anchors each if ladder is not support at bottom on grade.
7. Extend rails 42" above top rung and return rails to wall or structure unless other secure handrails are provided. If the adjacent structure does not extend above the top rung, goose neck the extended rails back to the side rails to provide secure ladder access.
8. If indicated by the project details, provide 4” thick concrete support pad at grade, provide 3” x 6” x 1/4" base plate for each side rail and secure ladder to concrete as detailed.
9. Provide non-slip surface on the top of each rung, either by coating the rung with aluminum oxide granules set in epoxy resin adhesive, or by using a type of manufactured rung which is filled with aluminum oxide grout.

2.7 FINISHES

A. Aluminum:
1. Exterior aluminum surfaces: Mill finish
2. Apply two (2) coats of bituminous paint to concealed aluminum surfaces in contact with cementitious or dissimilar materials.

3. Apply non-slip abrasive coating to aluminum grate platform and rungs (aluminum oxide granules set in epoxy resin adhesive).

B. Steel-
1. Prepare surfaces to be primed in accordance with SSPC SP 2.1
2. Galvanizing for fabrications: Hot Dip - ASTM A 123, after fabrication.
3. Galvanizing for fasteners, connectors and anchors: Hot Dip – ASTM A 153.

PART 3 EXECUTION

3.1 EXAMINATION AND PREPARATION

A. Verify that field conditions are acceptable and are ready to receive the work of this Section.

B. Field Measurement: Take field measurements prior to preparation of shop drawings and fabrication where possible. Do not delay job progress; allow for trimming and fitting where taking field measurements before fabrication might delay work.

C. Coordinate and furnish anchorages, setting drawings, diagrams, templates, instructions, and directions for installation of anchorages, such as concrete inserts, sleeves, anchor bolts and miscellaneous items having integral anchors, which are to be embedded in concrete or masonry construction. Coordinate delivery of such items to project site.

3.2 INSTALLATION

A. Fastening to In-place Construction: Provide anchorage devices and fasteners where necessary for securing miscellaneous metal fabrications to in-place construction: including, threaded fasteners for concrete and masonry inserts, toggle bolts, thru-bolts with plate washers, lag bolts, wood screws and other connectors as required. Verify existing conditions for determining proper anchorage.

B. Cutting, Fitting and Placement: Perform cutting, drilling and fitting required for installation of miscellaneous metal fabrications. Set work accurately in location, alignment and elevation, plumb, level, true and free of rack, measured from established lines and levels. Provide temporary bracing or anchors in formwork for items which are to be built into concrete, masonry or similar construction.

C. For hollow masonry anchorage, use toggle bolts having square heads.

3.3 ERECTION TOLERANCES

A. Division 01 - Quality Requirements: Tolerances

3.4 SCHEDULES

A. The following Schedule is a list of principal items only. Refer to Project Details for items not specifically scheduled.

B. Ladders: Locations shown on plans
   1. Miter and cope intersections within 2 degrees, fit to within 1/8 inch.
   2. Continuously weld connections.
   3. Where length exceeds that suitable for shipping and handling, fabricate in sections with concealed internal sleeves forming slip joints. Extend sleeves minimum 4 inches on both sides of joint; field weld and grind smooth.

C. Grating
   1. NAAMM MBG 531, welded type.
   2. Fabricate supporting frame for opening size and configuration.
   3. 1 1/4" deep x 1 1/4" spaced aluminum grate platform.
   4. Top surface: Non-slip. Aluminum oxide granules set in epoxy resin adhesive.

END OF SECTION

PART 1 GENERAL

1.1 SECTION INCLUDES

A. Miscellaneous framing and sheathing.
B. Nailers and blocking,
C. Field fabricated expansion joint curbs and curb extensions,
D. Preservative treatment of wood where indicated.

1.2 RELATED SECTIONS

A. Section 07419 – Standing Seam Metal Roofing
B. Section 07530 – Thermoplastic Single-Ply Roofing
C. Section 07565 – Preparation for Reroofing
D. Section 07620 – Sheet Metal Flashing and Trim

1.3 REFERENCES

A. American National Standards Institute:
1. ANSI A208.1 - Mat-Formed Wood Particleboard.

B. American Wood-Preservers' Association:
1. AWPA Standard U1, UC 1-4 - All Timber Products - Preservative Treatment by Pressure Process.
2. AWPA Standard U1, UCF A and B - Structural Lumber - Fire-Retardant Treatment by Pressure Processes.

C. ASTM International:
1. ASTM E84 - Standard Test Method for Surface Burning Characteristics of Building Materials.

D. National Fire Protection Association:
1. NFPA 255 - Standard Method of Test of Surface Burning Characteristics of Building Materials.

E. Southern Pine Inspection Bureau:
1. SPIB - Standard Grading Rules for Southern Pine Lumber.

F. Underwriters Laboratories Inc.:
1. UL 723 - Tests for Surface Burning Characteristics of Building Materials.

G. U. S Department of Commerce National Institute of Standards and Technology:
1. DOC PS 1 - Construction and Industrial Plywood.
2. DOC PS 2 - Performance Standard for Wood-Based Structural-Use Panels.
3. DOC PS 20 - American Softwood Lumber Standard.

1.4 SUBMITTALS

A. Submit under provisions of Division 01.

B. Product Data: Submit technical data on
1. Wood /Plywood
2. Fasteners and Anchors
3. Wood preservative and fire-retardant treatment materials and application instructions.
4. MSDS of treatment materials.

C. Samples:
1. Fastener types: Two (2) of each type

D. Material Samples, if requested by the Architect.

E. Manufacturer's Certificate: Certify that Products meet or exceed specified requirements.

1.5 QUALITY ASSURANCE

A. Perform Work in accordance with the following agencies:
1. Lumber Grading Agency: Certified by DOC PS 20.
2. Plywood Grading Agency: Certified by DOC PS 20.

B. Surface Burning Characteristics:
1. Fire Retardant Treated Materials: Maximum 25/450 flame spread/smoke developed index when tested in accordance with ASTM E84.

C. Apply label from agency approved by authority having jurisdiction to identify each preservative treated and fire-retardant treated material.

D. Perform Work in accordance with current Florida Building Code requirements.

1.6 DELIVERY, STORAGE, AND HANDLING

A. Deliver to site, store, protect, and handle products under provisions of Section 01600.

B. Protect materials from physical damage. Store materials on raised platform and protect from weather.

1.7 PROJECT CONDITIONS

A. Existing Conditions
1. Verify existing conditions, such as soundness of perimeter conditions, and varying deck and wall thickness for length of anchoring surfaces required and other visible

conditions prior to bidding. Nailers height indicated on the details may vary from actual requirement.

2. Report conflicts or problems to the Architect for resolution prior to Bidding. Failure to report these conflicts and problems places the responsibility on the Contractor to complete the work in accordance with the Documents at no additional cost to the Owner.
3. Replace or restore to original condition any materials or work damaged during construction.
4. Surfaces not designated to receive the system shall be properly masked or otherwise protected against accidental spillage or application of the material to those areas.
5. Failure to install the work in strict accordance with provisions of this Section, is subject to total rejection of work specified herein.

PART 2 PRODUCTS

2.1 MATERIALS

A. Lumber Grading Rules: NFPA and SPIB.

B. Blocking, Battens, Studding, Nailers, Curb Extensions (within roof system) and Fascia Replacement: Stress Group D, 1x and 2x (as noted in drawings), No. 2 Grade Southern Yellow Pine species, 19 percent maximum moisture content, pressure preservative treated where noted by project details.
   1. Nominal sizes are shown or specified within the project documents, except as shown by actual dimensions.

2.2 SHEATHING MATERIALS

A. Plywood Sheathing: APA Rated Sheathing, 5/8" Thickness, CDX Grade (unless noted otherwise).
   1. Provide pressure treated plywood where exposed to moisture, or in contact with concrete or masonry building materials.

2.3 ACCESSORIES

A. Fasteners and Anchors:
   1. Fasteners: Stainless steel for high humidity and treated wood locations, zinc electroplated steel elsewhere.
   2. Anchors: Toggle bolt type for anchorage to hollow masonry. Expansion shield and lag bolt type for anchorage to solid masonry or concrete. Bolt or ballistic fastener for anchorages to steel.

2.4 FACTORY WOOD TREATMENT "USE CATEGORY SYSTEM" (AWPA Standard U1)

A. Use Category UC1 – Interior/Dry Conditions: Wood and wood based materials used in interior construction not in contact with the ground or foundations or any sources of moisture including roof and plumbing leaks.
   1. Wood Preservative (Pressure Treatment): AWPA Standard U1, Use Category 2 (UC2) or 3 (UC3); minimum of 0.25 pounds of ACQ-C (Alkaline Copper Quaternary) water borne preservative per cubic foot of wood product.

B. Use Category UC2 – Interior/Damp Conditions: Wood and wood based materials used in interior construction not in contact with the ground protected from direct exposure to the weather but may be subject to dampness (e.g., roof/curb blocking or plywood sheathing.
   1. Wood Preservative (Pressure Treatment): AWPA Standard U1, Use Category 2 (UC2) or 3 (UC3); minimum of 0.25 pounds of ACQ-C (Alkaline Copper Quaternary) water borne preservative per cubic foot of wood product.

C. Use Category UC4A - General Use Conditions: Wood and wood-based materials used in contact with the ground, fresh water or other situations favorable to deterioration.
   1. Wood Preservative (Pressure Treatment): AWPA Standard U1, Use Category 4A (UC4A); minimum of 0.40 pounds of ACQ-C (Alkaline Copper Quaternary) water borne preservative per cubic foot of wood product.

D. Fire Retardant Treatment for Wood/Plywood (FRTW): FRT plywood shall be impregnated with chemicals by a pressure process. Fire retardant chemical shall provide protection against termites and fungal decay, shall be registered for use as a wood preservative by the U.S. Environmental Protection Agency (EPA), shall comply with formulation FR-1 of the current edition of AWPA Standard P49, and shall be free of halogens, sulfates and ammonium phosphate. Treated wood shall have a flamespread of less than 25 when tested in an extended 30 minute tunnel test in accordance with ASTM E 84, NFPA 255 or UL 723.

E. Wood preservatives shall not contain arsenic, chromium other EPA classified hazardous preservatives.

PART 3 EXECUTION

3.1 INSTALLATION

A. General:
   1. Discard material with defects which might impair quality of work and units which are too small to fabricate work with minimum joints or optimum joint arrangement.
   2. Set carpentry work accurately to required levels and lines, with members plumb and true and accurately cut and fitted.
   3. Securely attach carpentry work to substrate by anchoring and fastening as shown or as required by recognized standards. Countersink fastener heads on exposed

carpentry work.

4. Use fasteners and anchorages as indicated. Make tight connections between members. Install fasteners without splitting of wood; pre-drill as required.

3.2 NAILERS AND CURBS.

A. Set members level and plumb, in correct position.

B. Construct curb members of single pieces.

C. Coordinate curbs and installation of wood nailers with roof construction work.

D. Edging and Blocking:
1. Provide wherever shown and where required for screeding or attachment of other work.
2. Form to shapes as shown and cut as required for true line and level on work to be attached. Coordinate location with other work involved.
3. Attach to substrates as required to support applied loading. Countersink bolts and nuts with washers, flush with surfaces, unless otherwise shown.
4. Where new members are doubled, ends shall be lapped and thoroughly spiked to each other and to bearing members.
5. Where new members bear on concrete, securely fastened to same by bolts or lag screws on centers as called for on drawings staggered. Provide heads of all bolts or lag screws with large-head washers.
6. Round corners of wood plates where flashing occurs.
7. Use ring shanked nails, except as otherwise indicated. Make tight connections between members. Install fasteners without splitting of wood; pre-drill as required.
8. Holes drilled oversized or wallered out, shall be re-drilled.
9. Do not install wood nailers more than one day in advance from installation of roofing. For earlier installation of wood nailers than stated above, obtain prior approval from the Architect. Install dry-in felt over any wood nailers and sheathing.

E. Plywood Sheathing:
1. Install sheathing properly framed to required lines, level and rigidly secured in place.
2. Cut sheathing sections to fit. Leave 1/8" clearance between panels at side laps. Cover sheathing with dry-in felt and seal top horizontal edge.

3.3 SCHEDULES

A. Roof Perimeter Nailers and curbs: See project manual details for sizes and locations.

B. Plywood Sheathing: See project manual details and plans for sizes and locations

END OF SECTION

PART 1 GENERAL

1.1 SUMMARY

A. The following specification outlines the requirements for a fully reinforced, cold fluid-applied, liquid resin flashing membrane and all other ancillary waterproofing work in conjunction with the single-ply roofing membrane application; including but not limited to, installation of pipe flashings and other penetration flashings, cast-in-place concrete canopies, sealants and metal work as specified.
   1. All flashing materials shall have a superior coefficient of expansion, to allow for differential movement between the horizontal and vertical surface of the flashed penetration or projection.
   2. New flashing system MUST provide fast-drying primers to allow substrate preparation, priming and membrane application to be completed the same day.

B. Related Sections:
   1. Section 02025 – Existing Conditions Assessment
   2. Section 06100 - Rough Carpentry.
   3. Section 07530 – Thermoplastic Single-ply Membrane Roofing.
   4. Section 07565 – Preparation for Reroofing
   5. Section 07620 - Sheet Metal Flashing and Trim

1.2 SECTION INCLUDES

A. Substrate preparation, cleaning, leveling and patching.

B. Temporary waterproofing and priming.

C. Flashing installation.

1.3 REFERENCES

A. ASTM International
   1. ASTM C 297 - Flatwise Tensile Strength, after aging (according to ICBO).
   2. ASTM D 412 – Standard Test Methods for Rubber Properties in Tension.
   3. ASTM D 413 - Adhesion Test method.
   4. ASTM D 471 - Test Methods for The Effects of Rubber- Liquid Properties.
   5. ASTM D 638 - Test Methods for Tensile Properties of Plastics.
   6. ASTM D 751 - Test Method of Coated Fabrics.
   7. ASTM D 882 - Test Method for Tensile Properties of Thin Plastic Sheathing.
   8. ASTM D 4541 - Pull-Off Strength of Coatings using Portable Adhesion Tester.
   9. ASTM E 84 - Test Method, Surface Burning Characteristics of Bldg. Materials.
   10. ASTM E 96 – Test Method, Water Vapor Transmission of Materials.
   11. ASTM G 23 – Test Methods for Weatherometer Testing (2000 Hrs.).

B. NFPA
   1. NFPA 255 - Test of Surface Burning Characteristics of Building Materials

C. FM Global
1. FM - Roof Assembly Classifications
2. FM DS 1-28 – Wind Loads to Roof Systems and Roof Deck Securement
3. FM 4450 – Approval Standard for Class 1 Insulated Steel Deck Roofs

D. NRCA (National Roofing Contractors Association)
1. NRCA - Roofing and Waterproofing Manual

E. Underwriters Laboratories, Inc.
1. UL - Fire Hazard Classifications
2. UL 723 - Tests for Surface Burning Characteristics of Building Materials
3. UL 790 – Tests for Fire Resistance of Roof Covering Materials.
4. UL 1256 – Fire Test of Roof Deck Construction
5. UL 1897 – Uplift Tests for Roof Covering Systems.

1.4 SUBMITTALS

A. Submit under provisions of Division 01.

B. Manufacturer's Certificate: Provide UL listing certificate for roofing system.

C. Contractor's Product Certificate: Submit notarized certificate, indicating products intended for Work of this Section, including product names and numbers and manufacturers' names, with statement indicating that products to be provided meet the requirements of the Contract Documents.

D. Product Test Reports: If requested, based on evaluation of comprehensive tests performed by manufacturer and witnessed by a qualified testing agency, for components of roofing rehabilitation system.

E. Proposed Protection Measures: Submit report, including Drawings, that indicates the measures proposed for protecting individuals and property, for environmental protection, and for dust control. Indicate proposed locations and construction of barriers.

F. Warranties: Unexecuted sample copies of special warranties.

G. Manufacturer's Field Reports: Submit under provisions of Division 01.

H. All products used shall be asbestos free.

1.5 QUALITY ASSURANCE

A. Perform Work in accordance with Contract Documents and NRCA Roofing and Waterproofing Manual except where NRCA details differ from the project manual details.

B. Maintain one copy of the NRCA document on site.

C. Work that is closely associated with liquid polyurethane roofing, including vapor barriers, insulation, flashing and counterflashing, expansion joints (if applicable), and joint sealers, is to be performed by the installing applicator of the primary roofing system.

D. Manufacturer's Inspection and Acceptance of Substrate Conditions: Roof membrane manufacturer's technical representative is to inspect the roof membrane / substrate conditions prior to application of roofing materials to verify the substrate is acceptable to receive the proposed roofing system in compliance with the appropriate Florida Product Approval Installation Instructions. A written report stating such is to be submitted to the Owner and Architect for their review and records.

1.6 QUALIFICATIONS

A. Manufacturer: Company specializing in manufacturing the products specified in this section with five years current documented experience.

B. Applicator: A single installer specializing in performing the work of this section with three current years documented experience and approved by system manufacturer.
1. The installation shall be done by an applicator approved in writing by the manufacturer of the polyurethane materials 10 days prior to bidding.

C. Supervisor: Maintain a full-time non-working supervisor, on job site during roofing work in progress. Supervisor shall have five current years minimum documented experience of roofing work similar to scope of specified roofing.

D. Manufacturer's Field Inspection and Services Representative:
1. Manufacturer of the roofing materials shall provide qualified personnel to observe field conditions of surfaces and installation, quality of workmanship as applicable, and to make appropriate recommendations.
2. Representative shall visit the Project throughout progress of the work.
a. Initial pre-installation meeting.
b. Site visits at maximum of one week intervals.
c. Prior to Substantial Completion inspection, a final inspection shall be made by manufacturer's representative.
d. Called meetings.

1.7 REGULATORY REQUIREMENTS

A. Conform to applicable code for roof assembly fire hazard requirements and regulations of jurisdictional authorities, including current Florida Building Code.

B. All roofing materials to be Class A as tested in compliance with ASTM E 108 -Standard Test Methods for Fire Tests of Roof Coverings.

C. FM: Roof Assembly Classification, Class 1 Construction. Comply with ASCE 7-10 and the current Florida Building Code wind up-lift requirements.

D. Thermal Resistance: Roofing system with thermal resistance properties of insulating materials, designated by R-values, as noted in Construction Documents.

E. Material Safety Data Sheets (MSDS): For all roofing products.

F. Contractor shall submit certification from a Florida Registered Engineer showing that the new roof system meets or exceeds ASCE 7 requirements. (Provide supporting calculations or Florida product approvals of a tested system.)

G. The contractor will be responsible for obtaining a Building Permit and any required submittals and inspections thereafter. Signed and sealed copies of the construction documents will be provided by the design professional, all other required documentation is to be provided by the contractor.
   1. Contractor is to provide any required Florida Product Approval information to the Building Official based on the specific project conditions and actual manufacturers and products used for this work.

1.8 CERTIFICATION

A. Materials: For each material specified with a standard or reference material designation, certification labels shall appear on each package of bulk-shipments to project with certificate of compliance.

B. Installer: Provide two copies of all certifications to Architect prior to beginning roofing work.

1.9 PRE-INSTALLATION CONFERENCE

A. Convene meeting one week prior to commencing work of this section at project site, with 72 hours minimum notice to participants. Meeting to include Contractor, Roofer, and Subcontractors, governing authorities, test agencies, product manufacturers, Architect and the Owner Representative.

B. Review requirements, Contract Documents, submittals, sequencing, availability of materials and installation facilities, proposed installation schedule, requirements for inspections and testing or certifications, forecasted weather conditions, governing regulations, insurance requirements, and proposed installation procedures. Review methods and procedures related to application of liquid polyurethane roofing system, including the following:
   1. Review methods and procedures related to liquid polyurethane preparation, including membrane roofing system manufacturer's written instructions.
   2. Procedures for salvaging and recycling of demolition and construction waste
   3. Review temporary protection requirements for existing roofing system that is to remain, during and after installation.
   4. Review roof drainage during each stage of re-coating and review roof drain plugging and plug removal procedures.

5. Review and finalize construction schedule, and verify availability of materials, Installer's personnel, equipment, and facilities needed to make progress and avoid delays.
6. Review base flashings, special roofing details, drainage, penetrations, equipment curbs, and condition of other construction that will affect re-coating.
7. Review HVAC shutdown and sealing of air intakes.
8. Review shutdown of fire-suppression, -protection, and -alarm and -detection systems.
9. Review governing regulations and requirements for insurance and certificates if applicable.
10. Review existing conditions that may require notification of Owner before proceeding.

C. Record discussion on matters of significance; furnish copy of recorded discussions to each participant. Discuss roofing system protection requirements for construction period extending beyond roofing installation.

1.10 DELIVERY, STORAGE AND HANDLING

A. Deliver to site, store, protect, and handle products under provisions of Division 01.

B. Deliver material in manufacturer's original, unopened containers with manufacturer's labels intact and legible.

C. Deliver material requiring fire resistance classification to the job with labels attached and packaged as required by labeling service.

D. Deliver enough material to allow continuous work.

E. Store rolls, cans and drums of cements, primers, and coatings, on end and over clean raised platforms.

F. Store and handle materials to protect them from.
1. Moisture, whether due to precipitation, or condensation.
2. Damage by construction traffic.
3. Temperatures over 110 degrees F or below 40 degrees F.
4. Mud, dust, sand, oil and grease.

G. Select and operate material handling equipment and store materials to keep from damaging existing construction or applied roofing.

H. Immediately remove and dispose of wet materials.

I. Comply with fire, safety, and environmental protection regulations.

J. Do not store materials on roof decks, nor position roofing installation equipment on roof decks, in concentrations exceeding design live loads.

K. Take special precautions against traffic on roofing when ambient temperature is above 80 degree F. Avoid heavy traffic on the work during installation.

1.11 PROJECT CONDITIONS

A. Existing Conditions:
1. The roofing applicator and sheet metal installer shall verify existing conditions, such as soundness of perimeter conditions, and varying deck and wall thickness for length of anchoring services required and other visible conditions prior to Bidding.
2. Report conflicts and problems to the Architect for resolution prior to Bidding. Failure to report these conflicts and problems places the responsibility on the Prime Contractor to complete the work in accordance with the Documents at no additional cost to the Owner.
3. Replace or restore to original condition any materials or work damaged during construction.
4. Surfaces not designated to receive the system shall be properly masked or otherwise protected against accidental spillage or application of the material to those areas.
5. Failure to install the work in strict accordance with provisions of this Section, is subject to total rejection of work specified herein.
6. Owner will occupy portions of building immediately below work area. Conduct refurbishment work so Owner's operations will not be disrupted. Provide Owner with not less than 72 hours' notice of activities that may affect Owner's operations.

1.12 ENVIRONMENTAL REQUIREMENTS

A. Do not apply roofing membrane during inclement weather ambient temperatures below 40 degrees F, or as defined by the roofing system manufacturer.

B. Do not expose materials vulnerable to water or sun damage in quantities greater than can be weatherproofed during same day.

C. Proceed with roofing work when existing and forecasted weather conditions permit work to be performed in accordance with requirements of this section and warranty compliance requirements.

1.13 SAFETY REQUIREMENTS

A. All work shall be in compliance with OSHA safety standards and regulations with emphasis on Section 29 CFR 1910, including but not limited to the following requirements.
1. Provide facility administrator one day prior notice before commencing with work or moving to new areas.
2. Proper identification and clothing, to work at all times. Only the facility administrator is permitted in the facility.

3. The Contractor shall provide sufficient temporary barricades in order to contain passage ways around tankers, trash chutes, hoisting areas and areas below roof edges where work is conducted.
4. Fire extinguishers are required, one on the ground and one on the roof deck.
5. Seal all possible seepage areas, before using liquids or adhesive materials.
6. Powder driven shot fasteners are not permitted.
7. No flammable or explosive substance or equipment for repairs or alterations shall be introduced in a building of normally low or ordinary hazard classification while the building is occupied unless the condition of use and safeguards provided are such as not to create any additional hazard or handicap to egress beyond the normally permissible conditions in the building.
8. Protect building and adjacent surfaces from spillage and repair or replace damaged materials at no cost to Owner.

B. All toxic substances enumerated in the Florida Substance List established pursuant to S.442.103 that are to be used in the construction, repair or maintenance of educational facilities are restricted to usage according to the following provisions:
1. Before any such substance may be used, the Contractor shall notify the Owner in writing at least three working days prior to using the substance. The notification shall contain:
   a. The name of the substance to be used;
   b. Where the substance is to be used; and
   c. When the substance is to be used.
2. The Owner shall take all reasonable actions to ensure that the Contractor complied with the safety precautions and handling instructions set forth in the material safety data sheet for each substance used by the Contractor so that usage of the substance poses no threat to the health and safety of residents, instructors and the general public.

C. All “hot work” in conjunction with this project shall be performed in compliance with the precautions defined within the “FM Global Hot Work Permit System”.

1.14 COORDINATION

A. Coordinate work under provisions of Division 01.

B. Coordinate the work with installing associated wood blocking and nailers, roofing, expansion joints and area dividers, and metal flashing as the work of this section proceeds.

1.15 SEQUENCING

A. Organize operations so work can simultaneously proceed on the various aspects including roofing and flashing so at the end of each day the work done that day will be substantially complete.

B. Roof area shall be substantially complete prior to beginning another roof area; utilize multiple crews for multiple roof area construction. Phasing of roof construction by area is not permitted.

C. Sequence equipment removal with covering of deck openings with plywood strong enough to prevent injuries from falling through. Contractor shall install waterproof covering over plywood and tie-in to existing membrane to achieve complete watertightness.

1.16 WARRANTY

A. Work of this section is to be included within and fully covered by the 20 year roofing manufacturer's warranty specified within specification section 07530 when utilized for flashing conditions associated with the roofing system.

B. Work of this section is to be included within and fully covered by the 2 year roofing applicator's warranty specified within specification section 07530 when utilized for flashing conditions associated with the roofing system.

C. If utilized independently from the roofing system, provide the manufacturer's standard material and performance warranty with a minimum term of 10 years.

D. If utilized independently from the roofing system, provide the applicator's standard 2 year workmanship warranty.

PART 2 PRODUCTS

2.1 LIQUID POLYURETHANE ROOFING SYSTEM

A. New liquid applied polyurethane roofing membrane and associated products shall be intended to be fully adhered to the existing underlying roof substrate material upon proper preparation.
   1. These specifications are using products from Tremco, Inc. as a "basis of design", equivalent products from the following manufacturers are acceptable:
      a. Siplast
      b. Sika
      c. Architect approved equivalent manufacturer prior to bidding.

B. Roofing membrane system shall have a current Florida Product Approval and comply with the current Florida Building Code and ASCE 7 wind uplift requirements as defined by the documents for this project.

C. Manufacturers and Approved Products:
   1. Obtain primary liquid applied polyurethane materials from a single manufacturer and provide secondary materials only as recommended by the manufacturer of the primary material, as specified.

2. The Drawings are generic and not based on a specific manufacturer. Detail deviations will be accepted to permit utilization of the selected manufacturer's standard products and details when, in the Design Professional's judgment, such deviations do not materially detract from the original design concept or intended performance.
   a. Submit proposed deviations to Design Professional for approval in writing prior to ordering materials that are in the category of substitutions.
3. Material substitutions are not permitted without prior approval by the architect.

D. Polyurethane materials:
1. Finish Coat: Polyurethane roof coating system topcoat, bio-based low-odor low-VOC two-part, for application over compatible base coat.
   a. Basis of design product: Tremco, AlphaGuard BIO Top Coat.
   b. Combustion Characteristics, UL790: Class A, for two-coat system.
   c. Volatile Organic Compounds (VOC), maximum, ASTM D3960: <6 g/L.
   d. Solar Reflectance Index (SRI), ASTM E 1980: not less than 103 (white).
   e. Accelerated Weathering, 5000 hours, ASTM G 154: Pass.
   f. Hardness, Shore A, minimum, ASTM D2240: 81.
   g. Solids, by volume, ASTM D2697: 100 percent.
   h. Bio-Based Content, Minimum: 60 percent.
   i. Minimum Thickness, unreinforced system (10-yr. warranty): 16 mils wet.
   j. Minimum Thickness, reinforced system (20-year warranty): 32 mils wet.
   k. Minimum Thickness, Slip-Resistant Coat: 24 mils wet.
   l. Color: White.

2. Base Coat: Polyurethane roof coating system base coat, bio-based, low-odor low-VOC two-part, for use with a compatible topcoat.
   a. Basis of design product: Tremco, AlphaGuard BIO Base Coat.
   b. Combustion Characteristics, UL 790: Class A, for two-coat system.
   c. Volatile Organic Compounds (VOC), maximum, ASTM D3960: 1 g/L.
   d. Accelerated Weathering, 5000 hours, ASTM G154: Pass.
   e. Hardness, Shore A, minimum, ASTM D2240: 88.
   f. Solids, by volume, ASTM D2697: 100 percent.
   g. Bio-Based Content, Minimum: 70 percent.
   h. Minimum Thickness, unreinforced system (10-year warranty): over granular surfaced modified bitumen: 32 mils wet.
   i. Minimum Thickness, reinforced system (20-year warranty) over granular surfaced modified bitumen: 64 mils wet.

3. Polyester Reinforcing and Protection Fabric: 100 percent stitch-bonded mildew-resistant polyester fabric intended for reinforcement of compatible fluid-applied membranes and flashings and as a protection layer under pavers or stone aggregates.
   a. Basis of design product: Tremco, Permafab.
   b. Tensile Strength, Minimum, ASTM D1682: 50 lbf average.
   c. Elongation, Minimum, ASTM D1682: 60 percent.

d. Tear Strength, Minimum, ASTM D1117: 16 lbf average.
e. Weight: 3 oz./sq. yd.

E. Auxiliary Materials:
1. General: Auxiliary materials recommended by roofing system manufacturer for intended use and compatible with existing roofing system and fluid-applied roofing system.

2. Joint Sealant: Elastomeric joint sealant compatible with applied coating, with movement capability appropriate for application.
a. Joint Sealant, Polyurethane: ASTM C920, Type S, Grade NS, Class 50 single-component moisture curing sealant, formulated for compatibility and use in dynamic and static joints; paintable.
b. Basis of design product: Tremco, TremSEAL Pro.
c. Volatile Organic Compounds (VOC), maximum, ASTM D3960: 40 g/L.
d. Hardness, Shore A, ASTM C661: 40.
e. Adhesion to Concrete, ASTM C794: 35 pli.
f. Tensile Strength, ASTM D412: 350 psi.
g. Color: Closest match to substrate.

3. Fasteners: Factory-coated steel fasteners and metal or plastic plates meeting corrosion-resistance provisions in FM 4470; designed for fastening roofing membrane components to substrate; tested by manufacturer for required pullout strength; and acceptable to roofing system manufacturer.

4. Miscellaneous Accessories: Provide miscellaneous accessories recommended by roofing system manufacturer.

5. Slip Resistant Aggregate for Fluid-Applied Walkways: Silica sand, broadcast into fluid-applied roof coating products for use as aggregate fill for slip-resistant, abrasion-resistant coating applications.
a. Basis of design product: Aggregate, Slip Resistant Silica Sand.
b. Size: 20 - 40 mesh.
c. Application Rate: Minimum 20 lb./100 sq ft.

2.2 MISCELLANEOUS MATERIALS:

A. All other materials and accessories, not specifically described, but required for a complete and proper installation of roofing, shall be products of, or recommended by the primary roof material manufacturer and with Architect's approval.

PART 3 EXECUTION

3.1 GENERAL

A. Install flashing system materials and assemblies in strict accordance with manufacturer's recommendations.

B. Maintain one current copy of applicable manufacturer's installation instructions for system components and one copy of Contract Documents including system approvals on the rooftop during installation.

3.2 EXAMINATION

A. Verify that surfaces and project site conditions are ready to receive work as defined in this section.

B. Verify that area to be coated is smooth, dry and free of water, grease, oil, dirt, dust, debris, gravel, paint, asphalt, projections, depressions, loose scale, sand, curing compounds and other foreign deposits in accordance with manufacturer's recommendations.

C. Do not begin work until unsatisfactory conditions are corrected. Beginning work means installer accepts surfaces and substrates as satisfactory and ready to receive flashing materials.

3.3 INSTALLATION REQUIREMENTS:

A. Protect other work from spillage of roofing materials and prevent liquid materials from entering or clogging drains and conductors. Replace and/or restore other work damaged by installation of roofing system work. Limit traffic and material storage to areas of existing roofing membrane that have been protected.

B. Shut down air intake equipment in the vicinity of the Work in coordination with the Owner. Cover air intake louvers before proceeding with application work that could affect indoor air quality or activate smoke detectors in the ductwork.

C. Pollution Control: Comply with environmental regulations of authorities having jurisdiction. Limit spread of dust and debris. Remove and transport debris in a manner that will prevent spillage on adjacent surfaces and areas. Remove debris from building roof by chute, hoist, or other device that will convey debris to grade.

D. Insurance/Code Compliance: Install system for (and test where required to show) compliance with governing regulations and with the following requirements:
   1. Underwriter's Laboratories "Fire Classified" and "Class A", the Florida Building Code for 141 mph (ultimate) / 109 mph (nominal) wind up-lift resistance.

3.4 PREPARATION

A. Existing Surfaces
1. Remove contaminants such as, coatings and other materials that may interfere with proper adhesion. Take extra precautions not to damage existing structure or adjoining surfaces. Protect adjacent materials and finishes from physical damage. Provide protection as required and remove from site at completion of work.
2. Flashings or substrates shall be abrasively cleaned or ground as required to provide a sound open abraded surface.
3. Mask off and protect adjacent finished surfaces that are not scheduled to receive the new fluid applied flashing system.

B. Duct Roof Penetrations.
1. Prior to applying finish coating system, the base of all roof duct penetrations, including adjacent penetrations within the area of flashings, must be sealed with Detail Coating at a rate of 30 – 40 LF/gal in a three course combination with reinforcing fabric, or as indicated in the drawings. (A three-course combination consists of detail coating / fabric / detail coating.)
2. Prior to applying finish coating system, all end-lap (horizontal) and side-lap (vertical) seams within the flashing areas must be treated with Detail Coating applied by brush. Back-brush Detail Coating into any open seams. Apply detail coating over seams and panel laps at a rate of 30 – 40 LF/gal in a three course combination with reinforcing fabric. (A three-course combination consists of detail coating/fabric/detail coating.)
3. Seams or laps with openings greater than 1/8” must be filled with polyurethane sealant prior to application of Detail Coating and reinforcing fabric. Seams or laps with greater than 1/2” openings must be drawn together with self-tapping sheet metal screws and neoprene washer.
4. Sealant to use at seams and panel lap applications shall be a two component, gun-grade, polyurethane sealant, such as Sonneborn NP2 or approved equivalent.
5. Finish coat shall completely cover all base coats, detail coats, primers, sealants, etc.

3.5 FLASHINGS AND ACCESSORIES

A. Install project detailed or manufacturer’s standard membrane flashings and accessories in locations indicated on the plans and in accordance with the manufacturer’s instructions. All flashing shall be tight and of adequate height to assure watertightness. Whenever possible a minimum of 6" of membrane shall be extended into flashing areas, with resin extending past end of fleece 2” minimum.

B. Laps/Seams: Maintain a minimum 2 inch overlap at all side laps of adjacent fleece rows and 4 inch overlaps at butt laps, tie-ins and flashings (reinforcing fleece and resin). For tie-ins onto modified bitumen, asphalt or other approved membranes, provide minimum 12 inch overlaps (reinforcing fleece and resin).

C. Seal flashings and flanges of items penetrating membrane.

3.6 FLUID-APPLIED ROOFING / FLASHING APPLICATION:

A. General: Organize the various aspects of the work so at the end of each day the area completed on that day is substantially complete.

B. Fluid-Applied Roofing / Flashing and Detail Base Coat Application: Complete base coat and fabric reinforcement at duct penetrations, and sanitation pipe penetration prior to application of field of fluid-applied membrane. Apply base coat in accordance with manufacturer's written instructions.
   1. Apply base coat on prepared and primed surfaces and spread coating evenly. Extend coating minimum of 8 inches up vertical surfaces and 4 inches onto horizontal surfaces.
   2. Back roll to achieve not less than minimum coating thickness indicated in Part 2 product listing unless greater thickness is recommended by manufacturer. Verify thickness as work progresses.
   3. Fabric Reinforcement: Embed fabric reinforcement into wet base coat. Lap adjacent flashing pieces of fabric minimum 3 inches along edges and 6 inches at end laps.
      a. Roll surface of fabric reinforcing to completely embed and saturate fabric. Leave finished base coat with fabric free of pin holes, voids, or openings.
   4. Allow base coat to cure prior to application of topcoat.

3.7 COMPLETION

A. Remove any and all debris, excess materials and scrap of any kind from the roof and surrounding premises prior to demobilization.

B. Inspect all field areas, detailing and terminations to insure a 100% watertight installation.

3.8 FIELD QUALITY CONTROL

A. Field inspection and testing will be performed under provisions of Contract Documents.

B. Roof Inspection: Engage roofing system manufacturer's technical personnel to inspect roofing installation and submit daily report.

C. Repair fluid-applied membrane where test inspections indicate that they do not comply with specified requirements. Correct identified defects or irregularities.

D. Arrange for additional inspections, at Contractor's expense, to verify compliance of replaced or additional work with specified requirements.

E. Require site attendance of roofing and insulation materials manufacturers during installation of the Work.

3.9 CLEANING

A. In areas where finished surfaces are soiled by work of this section, consult manufacturer of surfaces for cleaning advice and comply with their instructions.

B. Repair or replace defaced or disfigured finishes caused by work of this section.
1. Trash and scraps are a hazard and shall be collected and properly and legally disposed of immediately off-site.
2. The applicator shall remove all masking protection equipment, materials and debris from the work and storage areas and leave those areas in an undamaged and acceptable condition.
3. Where existing sod has been damaged, install new sod in an acceptable manner blending the edges of new sod to existing surrounding sod.
a. Do not place new sod over existing sod. Excavate so that top plane of new sod will conform to adjacent plane of existing sod. Match new sod with existing sod type

3.10 PROTECTION

A. Protect building surfaces against damage from roofing work.

B. Protect surfaces where traffic must continue over finished roof membrane.

C. Upon completion of roofing work (including associated work) advise Owner of recommended procedures for surveillance and protection of roofing during remainder of construction period. At the end of the construction period, or at a time when remaining construction work will in no way affect or endanger roofing, make a final inspection of roofing and prepare a written report to Owner and Architect describing nature and extent of deterioration or damage, if any, found in the work.

D. Repair or replace the roofing and associated work to a condition free of damage and deterioration at time of substantial completion.

3.11 CLOSEOUT SUBMITTALS

A. Maintenance Data: To include in maintenance manuals.

B. Warranties: Executed copies of approved warranty forms.

END OF SECTION

PART 1 GENERAL

1.1 SUMMARY

A. Section Includes:
1. Preformed, pre-finished standing seam metal roof panel systems.
2. Self-adhesive, modified bitumen underlayment.
3. Flashings, trim, anchorage, and accessories.

B. Related Sections:
1. Division 01: Administrative, procedural, and temporary work requirements.
2. Section 01110 – Summary of Work
3. Section 06100 – Miscellaneous Rough Carpentry
4. Section 07620 – Sheetmetal Flashing and Trim
5. Section 07900 - Joint Sealers.

1.2 REFERENCES

A. American Society of Civil Engineers (ASCE)
1. ASCE 7 - Minimum Design Loads for Buildings and Other Structures.

B. American Architectural Manufacturers Association (AAMA):
1. AAMA - 620 - Voluntary Specifications for High Performance Organic Coatings on Coil Coated Architectural Aluminum Substrates.
2. AAMA - 621 - Voluntary Specifications for High Performance Organic Coatings on Coil Coated Architectural Hot Dipped Galvanized (HDG) and Zinc-Aluminum Coated Steel Substrates.
3. AAMA - 2605 - Voluntary Specification, Performance Requirements and Test Procedures for Superior Performing Organic Coatings on Architectural Extrusions and Panels.

C. ASTM International (ASTM):
1. ASTM A 653 - Standard Specification for Steel Sheet, Zinc-Coated (Galvanized) or Zinc-Iron Alloy-Coated (Galvannealed) by the Hot-Dip Process.
2. ASTM A 792 - Standard Specification for Steel Sheet, 55% Aluminum-Zinc Alloy-Coated by the Hot-Dip Process.
3. ASTM B 209 - Standard Specification for Aluminum and Aluminum-Alloy Sheet and Plate.
4. ASTM C 1549 - Standard Test Method for Determination of Solar Reflectance Near Ambient Temperature Using a Portable Solar Reflectometer.
5. ASTM D 226 - Standard Specification for Asphalt Saturated Organic Felt Used in Roofing and Waterproofing.
6. ASTM D 412 - Standard Test Method for Vulcanized Rubber and Thermoplastic Rubbers and Thermoplastic Elastomers - Tension.

7. ASTM D 1970 - Standard Specification for Self-Adhering Polymer Modified Bituminous Sheet Materials Used as Steep Roofing Underlayment for Ice Dam Protection.
8. ASTM D 6757 - Standard Specification for Underlayment Felt Containing Inorganic Fibers Used in Steep-Slope Roofing.
9. ASTM E 283 - Standard Test Method for Rate of Air Leakage through Exterior Windows, Curtain Walls and Doors.
10. ASTM E 331 - Standard Test Method for Water Penetration of Exterior Windows, Doors, and Curtain Walls by Uniform Static Air Pressure Differential.
11. ASTM E 1592 - Standard Test Method for Structural Performance of Sheet Metal Roof and Siding Systems by Uniform Static Air Pressure Difference.
12. ASTM E 1980 - Standard Practice for Calculating Solar Reflectance Index of Horizontal and Low-Sloped Opaque Surfaces.

1.3 SYSTEM DESCRIPTION

A. The general scope of the work is to remove the existing standing seam metal roof system at the perimeter mansard system and install a new snap-lock seamed prefinished aluminum roof system on a self-adhesive, modified bitumen underlayment over an existing underlayment and plywood sheathing.
   1. The design intent is to match the appearance of the new selected campus colors (blue, similar to building “D”), exact color to be selected by Owner.

B. Design Requirements; design roof system to withstand:
   1. Live and dead loads in accordance with 2017 Florida Building Code.
   2. Minimum wind uplift pressures based on a design wind speed of 141 mph ultimate / 109 mph nominal (actual) as defined and calculated in accordance with the current editions of ASCE 7 and the 2017 Florida Building Code with maximum allowable deflection of L/180, tested in accordance with ASTM E 1592.
   3. Movement caused by an ambient temperature range of 120 degrees F and a surface temperature range of 180 degrees F.

C. Performance Requirements:
   1. Air leakage: Maximum 0.03 CFM per square foot of roof area, measured at reference differential pressure across assembly of 6.24 PSF, tested to ASTM E283.
   2. Water leakage: None when tested according to ASTM E331 with test pressure of 6.24 PSF.

1.4 SUBMITTALS

A. Submittals for Review:
   1. Submit under provisions of Division 01.
   2. Shop Drawings: Show scaled layouts of panel configuration. Indicate only those conditions which differ from or are not included in the project documents.
   3. Product Data:

a. Show system components (panels, trim, and accessories).
b. Provide data on metal type, finishes, characteristics and general recommendations from metal panel manufacturer.
c. Current Florida Product Approval or Miami-Dade Notice of Acceptance which meet or exceed the design requirements of this project.

4. Manufacturer's written installation instructions: Indicate special handling criteria, installation sequence, and cleaning procedures and certifications.
5. Engineer's Calculations:
   a. Provide calculations which have been prepared, signed and sealed by a Florida Registered Structural Engineer based on the performance and test data obtained from the manufacturer's ASTM E 1592 testing program.
   b. Submit two copies of the ASTM E 1592 test results with the structural calculations for review by the Owner and the Architect.
6. Samples:
   a. After color selection submit two (2) sets of two (2) interlocking roof panel samples, approximately 24" to 36" wide by 30" long, in selected color on representative backing.
   b. Fasteners: Submit two (2) samples of each fastener type.

B. Closeout Submittals
   1. Warranties: Panel system and Finish

1.5 MOCK-UP

A. If requested, provide mock-up of the metal roofing system under provisions of Division

B. Construct metal roofing mock up, three (3) feet long (or two panel widths), minimum width which includes metal panels mounted to substrate illustrating typical methods and materials for the standing seam support, deck anchorage, hemmed lower edge and cleat, boxed upper edge, metal 'Z' closure piece, sealant application and ridge cap flashing installation

C. Mock-up may remain as part of the Work if continuous from eave to ridge, located at a hip or rake edge and if approved as installed by the Owner and Architect.

1.6 QUALITY ASSURANCE

A. Materials Manufacturer Qualifications: Company specializing in manufacturing the products specified in this Section with five (5) years current documented experience.

B. Manufacturer's Field Inspection and Services
   1. Manufacturer of roofing products shall provide qualified personnel to observe field conditions of surfaces and installation, quality of workmanship, as applicable, and to make appropriate recommendations.

2. Representative shall visit the project throughout the progress of the work as necessary to ensure the quality of workmanship. Site visits shall be schedule as follows:
   a. Pre-construction meeting
   b. Major construction segments
   c. Perform Manufacturer's final inspection prior to Architect's Substantial Completion Inspection.
   d. Attend called meetings.
3. Representative shall submit written reports within three (3) days to Architect listing observations, recommendations and other related comments

C. Coordinated Installation: Except as otherwise indicated, perform roofing and flashing work as a single integrated unit of work, without division of responsibility between separate installers (a Single Installer responsibility is required)

D. Installer Qualifications: Work of this Section shall be performed by a single installer and shall be a firm specializing in metal roofing system work for at least five (5) years documented experience and approved by the system manufacturer.
1. Applicator shall have completed a minimum of three (3) projects of a similar nature and size within the last five (5) years.
2. A minimum of 35% of the work must be performed by full-time employees of the applicator with a minimum of six (6) months continuous documented work experience with that company.
3. The Owner reserves the right to request submission of appropriate documentation of the above defined qualifications within twenty-four (24) hours after the bid. Failure to submit documentation upon request, or to meet the above defined experience qualifications, may be grounds for disqualification of the bid.

E. If requested by the Owner, submit a copy of a list of projects, (with project name, location, date, size, roof system, cost and references). The list shall contain contacts and phone numbers.

F. The installation shall be performed by a roofing contractor who has been trained by the manufacturer and certified in writing as an installer approved by the manufacturer of the metal roofing (and siding). Certificate holder must be employed by roofing contractor and be present at the jobsite for the duration of the project.

G. Submit a copy of the manufacturer's certification with the Bid.

H. Maintain full-time supervisor/foreman, not a workman/foreman, on job site during times that roofing work is in progress. Supervisor must have minimum of three (3) years experience in roofing work of same or similar products manufacturer as bid. Submit a copy of their resume with project experience with the bid.

I. Test proposed fastener to verify that pull out strength per fastener is adequate in relation to the project engineering requirements. A documented pull test report from the

fastener manufacturer is to be provided indicating a minimum number of pull tests per roof area and per square feet as required by the roofing material manufacturer

1.7 DELIVERY, STORAGE AND HANDLING

A. Deliver to site, store, protect and handle products under provisions of Division 01.

B. Store and protect panels from moisture due either from precipitation or condensation, damage by construction traffic, temperature extremes, mud, dust sand, oil, grease or dirt.

C. Protect panels from contact with any materials that could cause staining or discoloration of finish.

D. Stack preformed and prefinished material in such a manner as to prevent twisting, bending, warping, surface damage, or abrasion, and to provide ventilation. Slope metal sheets to ensure drainage

1.8 ENVIRONMENTAL CONDITIONS

A. Do not install underlayment at ambient or surface temperatures less than 40 degrees F or on wet or frozen substrate.

1.9 PROJECT CONDITIONS

A. The roofing applicator and sheet metal installer shall verify existing conditions, such as soundness of perimeter conditions, and varying deck and wall thickness for length of anchoring devices required and other visible conditions prior to Bidding. Information used in the design was obtained from original design drawings, existing records and site inspection

B. Conflicts and problems shall be reported to the Architect prior to Bidding, for resolution. Failure to report these conflicts and problems places the responsibility on the Prime Contractor to complete the work in accordance with the Documents at no additional cost to the Owner

C. Replace or restore to original condition any materials or work damaged during construction.

D. Surfaces not designated to receive the system shall be properly masked or otherwise protected against accidental spillage or application of the material to those areas

E. Failure to install the work in strict accordance with provisions of this Section, is subject to total rejection of work specified herein.

1.10 WARRANTIES

A. Manufacturer's Warranty: Furnish a **twenty (20) year** materials and total roof (weather tight) system performance warranty inclusive of newly installed (roofing) materials from existing wall / deck to exterior finished surfaces. The warranty terms and conditions are to comply with the "Manufacturer's Notice of Intent to Issue Roof Warranty" attached at the end of this Section and includes in part:

1. A twenty (20) year warranty providing coverage against chipping, cracking, fading, or delamination of panel finish.
2. A twenty (20) year warranty providing coverage against rupture, perforation, or structural failure of aluminum alloy coated panels.
3. The warranty shall be governed by the laws of the State of Florida. The sole and exclusive venue for any litigation arising from or related to this Warranty or any work performed under the terms of this Warranty, shall be in St. Johns County, Florida.

B. Applicator's Warranty: Furnish a **two (2) year** applicator warranty in accordance with the provisions attached Applicator's Warranty form attached at the end of this Section.

PART 2 PRODUCTS

2.1 MANUFACTURERS

A. Acceptable manufacturers & products are as follows:

1.	ATAS International, Inc.	Dutch Seam	www.atas.com
2.	Berridge Manufacturing Co.	Cee-Lock	www.berridge.com
3.	Centria Architectural Systems.	SDP 175	www.centria.com
4.	Drexel Metals, Inc.	DMC175S	www.drexelmetals.com
5.	Englert, Inc.	S2000 Series	www.englertinc.com
6.	Firestone / Una-Clad	UC-14 Panel	www.firestonebpco.com
7.	Fabral.	Slim Seam	www.fabral.com
8.	Imetco	1 3/4" SnapLok	www.imetco.com
9.	Merchant & Evans, Inc.	Classic Rib	www.ziprib.com
10.	Morin Corporation	SWL Profile	www.morincorp.com
11.	Petersen Aluminum Corp.	Snap Clad	www.pac-clad.com
12.	Architect approved equivalent system.		

B. All metal roofing systems shall have current Florida Product Approval or Miami-Dade Notice of Acceptance which meet or exceed the design requirements of this project.

C. Substitutions: Considered and processed under the provisions of Division 01.

D. Being listed as a pre-qualified manufacturer does not release the manufacturer from providing complete and acceptable submittal documents which comply with all project requirements.

2.2 MATERIALS

A. Pre-finished Aluminum Sheet:
1. ASTM B209, alloy 3015-H14 or equivalent.
2. Recycled Content: Minimum 75 percent recycled aluminum, with minimum 40 percent classified as post consumer.

2.3 FABRICATION

A. General:
1. Provide roofing and wall panels roll formed to profile indicated and specified. Provide flashing, closures, fillers, metal expansion joints, ridge covers, roof panel mounting clips, gable and eave trim, gutters and other sheet metal accessories factory formed and finished. Material and finish shall be as specified.
2. Allowances for thermal expansion: Pre-engineered metal roof system shall be designed, fabricated, and installed to allow relative movement between roof panels and purlins, gables and ridges due to thermal expansion and contraction without causing damage to the system or permanent deformation to any of the system components. Roof panel are to be continuous from eave to ridge, intermediate end laps are not permitted.

B. Roof Panels:
1. Materials: Fabricate panels from Aluminum; 0.040 inch minimum, roll formed, smooth (non-embossed), aluminum sheet, 3105H274 aluminum per AA standards, actual gauge to be determined based on data obtained from ASTM E-1592 testing
2. Panel Profile: 1.5 inch high (minimum) standing seams spaced at 18 inches on center (maximum), with striations within the field of the panel, and interlocking edges intended to be snap-locked in the field. Panels shall be designed to provide full seam side laps when installed. Factory applied sealant shall be provided in female portion of seam.
3. Trim: Profiles as indicated or as required, fabricated from same material and finish as panels, unless specifically noted otherwise.
4. Panel Length: Roll form panels and trims to required profiles in longest practical lengths. Roof panels are to be continuous from eave to ridge, intermediate end laps are not permitted.
5. The majority of the metal flashings associated with the roofing and wall panels shall be provided in pre-finished aluminum to match the new roof panels. See specification Section 07620 – Sheet Metal Flashing and Trim, Article 3.5 for the flashing metal schedule.

2.4 FINISHES

A. Panels and Trim: Panels shall be factory painted with a full strength fluoropolymer finish. Paint shall contain 70-75% KYNAR 500 resin and applied, (0.80 mils thickness),

over manufacturer's primer, (0.20 mils thickness), with a total system thickness of 1.00 mils per ASTM D 1400. Gloss to be 20-30% per ASTM D 523 at 60 degrees.

1. Owner will select a single color from the manufacturer's standard solid and/or metallic color charts. Back side shall be factory painted with a polymer paint.

B. The physical characteristics of the exterior coating shall be measured by the following laboratory weather simulating tests to obtain test results justifying a manufacturer's **twenty (20) year** warranty:

1. Humidity Resistance at 95°F and 100% R.H. in accordance with ASTM D 2247: 1000 hours.
2. Salt Spray Resistance at 5% Salt Fog per ASTM B 117: 1000 hours.
3. Reverse Impact Resistance in accordance with ASTM D 2794: No cracking or loss of adhesion.
4. Resistance to Accelerated Weathering - in an Atlas Model XX-R Dew Cycle Weather-O-Meter in accordance with ASTM D 822: 5000 hours.
5. Abrasion Resistance to falling sand in accordance with ASTM D 968: 65 liters minimum.
6. Chemical/Acid/Pollution Resistance:
   a. Chemical spot tests in accordance with ASTM D 1308 procedure 5a, for Hydrochloric Acid, Sulfuric Acid and Sodium Hydroxide: No effect.
   b. Chemical spot tests in accordance with ASTM D 1308 procedure 5b, for Muriatic Acid and Tincture of Iodine: No effect.
   c. Resistance to sulfur dioxide in accordance with "KESTERNICH" cyclic test, (DIN 50018 and ASTM G 87): 15 cycles minimum.
7. Gloss finish shall be maintained evenly over entire surface in accordance with ASTM D 523.
8. Accessory finishes: The same warranty that applies to panel finishes shall apply to sheet metal accessories.

2.5 UNDERLAYMENT SHEET MATERIAL

A. Material: 40 mil minimum thickness, polyester or otherwise reinforced to prevent tearing, SBS modified asphalt waterproofing and underlayment membrane sheet, single-sided, self-adhesive, with a strippable treated release paper. Surface to be non-skid surface of mineral granules, fabric scrim and/or sanded. Acceptable Products are limited to:

1. Boral — TileSeal HT
2. InterWrap — Titanium PSU
3. Protecto Wrap Co. — Rain Proof - 40
4. Tamko — TW Metal and Tile Underlayment.
5. Soprema — Sopralene Stick.
6. Architect approved equivalent product, must be approved prior to use.

2.6 ACCESSORIES AND FASTENERS

A. Standing Seam Roof Panel Mounting Clips: Manufacturer's required stainless steel or nylon coated aluminum mounting clip, (or as required by the manufacturer) due to

existing rigid insulation. Size, shape, thickness and capacity of mounting clip to be as required to meet the design loads indicated. No field modifications of, or anchorage through the mounting clip will be permitted which will limit the ability of the roof system to accommodate thermal movement.

B. Sheet Panel Fasteners: Manufacturer's required fasteners. (appropriate length for use intended)
   1. Provide metal backed neoprene washers under heads of fasteners bearing on weather side of panels
   2. Use stainless steel fasteners for exterior application and galvanized or cadmium plated fasteners for interior applications. Lock rivets where required may be aluminum or stainless steel. Use painted fasteners where fastening into painted panel or trim.
   3. Locate and space fastenings for true vertical and horizontal alignment. Use proper type fastening tools to obtain controlled uniform compression for positive seal without rupture of neoprene washer.
   4. Use of exposed fasteners is not permitted, except where specifically allowed by the project details.

C. Sheet Metal Adhesive for aluminum and pre-finished metal: Utilize a 2 component methacrylate adhesive system, approved products are:
   1. SciGrip SG300 series adhesive as manufactured by SCIGRIP Americas, 600 Ellis Road, Durham, NC 27703. Contact: (887) 477-4583, (www.scigrip.com).
   2. Weld-on SS300 series adhesive as manufactured by IPS Structural Adhesives, Inc., 600 Ellis Road, Durham, NC 27703. Contact: (887) 477-4583, (www.ipscorp.com).
   3. Partite 7300 or 7400 series adhesive as manufactured by Parson Adhesives, Inc., 3345 Auburn Road, Suite 107, Rochester Hills, MI 48309. Contact: (248) 299-5585, (www.parsonadhesives.com).
   4. The above products have been represented locally by North American Composites, 3715 North Frontage Road, Lakeland, FL 33810. Contact: (800) 241-5817. (www.nacomposites.com).
   5. Architect approved equal.

D. Flexible Panel End Closure Strips: Closed cell, expanded cellular rubber, self-extinguishing, cut or pre-molded to match corrugation configuration of roofing and/or siding panels. Provide where indicated and necessary to ensure weathertight construction.

E. Prefabricated Pipe Flashing "Boot": Roof manufacturer’s standard compression molded EPDM rubber tapered pipe flashing unit with 1" wide flexible aluminum base. Material to be ozone and ultraviolet resistant. Basis of design to be EPDM Deck-Mate by Portals Plus, Inc. of Bensenville, IL or approved equal.

F. Joint Sealers: As specified in Section 07900.

G. Miscellaneous Accessories: Except as indicated as work of another specification section, provide components required for a complete roofing system, including trim, coping, fascias, sills, corner units, ridge closures, clips, seam covers, battens, flashing, sealants, gaskets, fillers, closure strips and similar items. Match materials and finishes of preformed painted panels. The same warranty that applies to panel finishes shall apply to sheet metal accessories.

PART 3 EXECUTION

3.1 GENERAL

A. Pre-engineered metal roofing system shall be installed in strict conformance with manufacturer's instructions. Roof panels shall be installed to allow for relative movement between roof panels and ridge, gables, fascias and other components of the roof system.

B. If a section of roof requires reworking and/or patching, the entire area or section of roofing shall be replaced. This shall mean from vertical surface to vertical surface, or roof perimeter to roof perimeter in all directions.

C. Watertightness Imperative:
1. The work specified herein will not preclude the use of procedures that will maintain the buildings watertight. Therefore, the Contractor, while conforming to these Contract Documents, must utilize necessary procedures to keep water out of the buildings while construction is in progress.
2. At end of each day's roofing installation and prior to the onset of all inclement weather, new section of roofing shall be temporarily sealed with cut offs to the unfinished substrates. Seal projections through the roof and to the surrounding intersections so that no moisture may enter roofing or into structure before work resumes. Remove cut offs before work resumes.

D. In areas where there is a chance of debris falling into the occupied space, work will be performed after hours, on weekends or on holidays.

E. Off Hour Work: The following roof construction activities must be coordinated and scheduled to occur while those spaces immediately below the required work are not occupied.
1. Asbestos abatement.
2. Roof tear-off.
3. Removal or installation of heavy roof top equipment.
4. Structural and/or deck repairs.
5. Loading or unloading of materials.
6. Installation of up-lift anchors into Tectum decks.
7. Any covered walkway roofing work.
8. Any interior (below structural roof deck) work.

3.2 EXAMINATION

A. Verify that surfaces and site conditions are ready to receive work.

B. Verify deck is supported and secured. Verify deck is clean and smooth, free of depressions, waves, or projections and properly sloped. Verify deck surfaces are dry. If applicable, verify flutes of metal deck are clean and dry.

3.3 INSTALLATION OF UNDERLAYMENT

A. Clean and prepare existing underlayment, fully prime top surface as directed by the manufacturer to receive the new underlayment.

B. Starting at low edge, apply underlayment horizontally on roof. Weatherlap each sheet 4 inches over preceding sheet. Lap ends 6 inches minimum.

C. Press to fully bond with substrate without voids, wrinkles, bridging, or fishmouths. Seal ends and edges.

D. Lap underlayment minimum 12 inches over hips and ridges from both sides. Apply 36 inch wide strip centered lengthwise over ridge.

E. Extend minimum 4 inches up abutting vertical surfaces.

3.4 INSTALLATION OF METAL ROOF PANELS

A. Install in accordance with manufacturer's instructions and approved Shop Drawings.

B. Install aligned, level, and plumb. Installation Tolerances:
1. Variation from location: Plus or minus 1/4 inch.
2. Variation from plane: 1/4 inch in 10 feet.

C. Fasten panels to underlying metal deck using concealed panel clips. Anchorage size, type and locations to be defined by the roofing manufacturer’s project specific engineering. Exposed fasteners are permitted at trim members where specifically detailed only.

D. Install panels in continuous lengths from eave to ridge without end joints.

E. Install trim to maintain visual continuity of system.

F. Install joint sealers and gaskets to prevent water penetration.

G. Flash penetrations through roofing with metal trim to match panels:
   1. Coordinate final plumbing stack penetration locations with the metal roof panel layout per the project details.
   2. Install flashings at roof panel penetrations, transitions and terminations per the project details, properly lap all components, provide sealant as a secondary means of weatherproofing.
   3. Install metal rain collar and joint sealant at top of pipe penetrations.
   4. Install water diverter (cricket) at uphill side of square and rectangular penetrations.

3.5 DAMAGED MATERIAL: Upon determination of responsibility, repair or replace damaged metal panels and trim to the satisfaction of the Architect and Owner.

3.6 ADJUSTING AND TOUCH-UP PAINTING

A. Apply manufacturer's supplied touch-up paint, at the discretion of the Architect, to any scratches or scrapes or other deficiencies in the painted metal finish

B. All raw edges of the metal roof panels or flashing which may be left exposed due to either factory or field cutting and may be subject to corrosion are to receive manufacturer’s supplied touch-up paint.

3.7 CLEANING AND PROTECTION

A. Cleaning: Clean exposed metal surfaces, removing substances which might cause corrosion of metal or deterioration of finishes.

B. Protection: Installer shall advise Contractor of required procedures for surveillance and protection of flashing and sheet metal work during construction, to ensure that work will be without damage or deterioration, other than natural weathering, at time of substantial completion.

END OF SECTION

MANUFACTURER'S NOTICE OF INTENT TO ISSUE ROOF WARRANTY

Whereas_____
herein called the "Roofing System Manufacturer" hereby gives notice to:

Owner: _____

Address:_____
of its Notice of Intent to issue its Roof Warranty, to the Owner for the Project,

Project:_____

Address:_____
incorporating the Manufacturer's_____
_____
roofing system or product is installed in accordance with the Contract Documents.

A. Manufacturers' Notice of Intent to Issue Roof Warranty in conformance with the Contract Documents shall be executed by the manufacturer and attached to the bid submittal. Each Bidder shall submit a single form, only from the specified manufacturer, and shall include items 1 and 2 as follows:

1. A detailed description of the components of the manufacturer's system proposed and a list of any other component and accessories, proposed for use in the system that is provided by other manufacturers or suppliers.

   a). A statement that the Manufacturer's Representative has thoroughly reviewed the job conditions and project manual, (plans, specifications & details). Having reviewed the above items and project requirements in detail, the Representative will provide a written response to the Design Professional ten days prior to the bid date, if conflicts between the Manufacturer's requirements occur with the above listed documents.

2. A sample of the Manufacturer's Roof Warranty shall be attached to and submitted with this form and the bid package. The manufacturer shall delete all exceptions relative to system failure from high wind conditions based on one of the following options:

   a). Uplift pressures due to any locally recorded wind speed of 109 mph or less.

   . . . . . or . . . . . .

   b). Uplift pressures below the following "Unfactored / (Nominal) Wind Uplift Pressures as calculated per the applicable Florida Building Code and ASCE 7 calculation methods:

   a) Interior of Roof (Zone 1): - 34 psf
   b) Perimeter of Roof (Zone 2): - 39 psf
   c) Corners of Roof (Zone 3): - 39 psf

3. **Twenty (20)** year total roof system warranty inclusive of all newly installed roofing materials, all included products and accessories, including all metal flashings, from existing roof substrate / deck to finish membrane, whether supplied by the membrane manufacturer or by a manufacturer approved / recommended third-party supplier.

Provide a “No Dollar Limit”, single source responsibility, non-deductible roofing warranty inclusive of all material and labor in full compliance with all the requirements of the project specifications.

a) The manufacturer shall modify the roof warranty to include total labor coverage for the warranty period and to cover damage to roof materials and insulation down to the roof deck resulting from water penetration.
b) The manufacturer shall modify the roof warranty to state that the Owner has the right to make emergency repairs without voiding the warranty if the manufacturer or applicator does not respond within 24 hours to notification by the Owner of a defect or leak.
c) The manufacturer shall modify the roof warranty to state that annual inspections with written reports by the Owner, and resulting maintenance, are sufficient to fulfill the periodic inspection requirements of the manufacturer’s warranty.
d.) The warranty shall be governed by the laws of the State of Florida. The sole and exclusive venue for any litigation arising from or related to this Warranty or any work performed under the terms of this Warranty, shall be in St. Johns County, Florida.

4. The manufacturer's Representative shall conduct a Post-Construction field inspection no earlier than **eleven (11) months**, and no later than **twelve (12) months** after the Date of Substantial Completion. Submit a written report within seven (7) days of this visit to the Owner's Maintenance Dept. listing observations, conditions and any recommended repairs or remedial action.

5. The manufacturer will, during the **second** (2nd), and **fifth** (5th), year of this warranty, inspect the roof system and provide a written Executive Summary of the Roof Condition to the Owner.

Further, the manufacturer acknowledges that the applicator:

Roof Applicator’s Name:_____

Address: _____

has been approved to install this roof system since _____, _____ and meets the criteria for an approved applicator listed in the Project Manual.

By signing the above, the Authorized Representative of said Manufacturer certifies and represents the Roofing System Manufacturer with the authority to contract and make the above representations to the Owner.

By: _____ Date: _____
Signature of Authorized Representative

Name:_____ Title: _____

Witness:_____ Date: _____

APPLICATOR'S WARRANTY FOR ROOFING

Whereas _____

of (Address)_____

herein called the "Roofing Contractor", has performed roofing, flashing and sheet metal and associated ("work") on following project:

Owner:_____

Address:_____

Name and Type of Building:_____

Address:_____

Area of Work:_____

Date of Acceptance:_____

Warranty Period: **Two (2) Years** Date of Expiration:

The Roofing Contractor hereby certifies to the Owner as a "Final Statement of Compliance" that the finished roof membrane (and insulation) system was installed in compliance with the approved contract documents.

AND WHEREAS Roofing Contractor has contracted (either directly with Owner or indirectly as a subcontractor) to warrant said work against leaks, faulty or defective materials, roofing components deemed faulty or in disrepair, and workmanship for designated the Warranty Period.

NOW THEREFORE Roofing Contractor hereby warrants, subject to terms and conditions herein set forth, that during Warranty Period he will at his own cost and expense, make or cause to be made such repairs to or replacements of said work as are necessary to correct faulty and defective work, and as are necessary to maintain said work in watertight condition.

This Warranty is made subject to the following terms and conditions.

1. Specifically excluded from this Warranty are damages to roofing work and other parts of the building, and to building contents, caused by: a) lightning, windstorm; b) fire; c) failure of roofing system substrate or structure (including cracking, settlement, excessive deflection, deterioration, and decomposition). When work has been damaged by any of the foregoing causes, Warranty shall be null and void until such damage has been repaired and until cost or repairs has been paid by the Owner or by another responsible party as so designated.

2. The Roofing Contractor is responsible for damage to work covered by this Warranty and is not liable for consequential damages to building or building contents, resulting from leaks or faults or defects of work.

3. The Owner shall promptly notify Roofing Contractor of observed, known or suspected leaks, defect, disrepair or deterioration. The Contractor shall guarantee to respond to all notifications within **twenty-four (24) hours** and to make all such repairs as deemed necessary to correct said leaks or defects to a satisfactory condition to the Owner. Repairs shall be made by workman in the current employment of the Contractor. Subcontracting of repair work is not permitted.

4. The definition of faulty roofing components or roofing in disrepair includes, but is not limited to the following:

   A. Failures of applicator applied finishes at any metal flashing components.
   B. Cracks or breaks in metal roof panels or flashing components.
   C. Disengagement of flashing from concealed cleats.
   D. Defects in the quality of work or materials.
   E. Leaks of any kind.

5. This Warranty is recognized to be the only warranty of the Roofing Contractor on said work, and shall not operate to restrict or cut off Owner from other remedies and resources lawfully available to him in cases of roofing failures. Specifically, this Warranty shall not operate to relieve Roofing Contractor of responsibility for performance of original work in accordance with requirements of the Contract Documents, regardless of whether Contract was a contract directly with Owner or a subcontract with Owner's General Contractor.

IN WITNESS THEREOF, this instrument has been duly executed this

_____day of_____, 20____.

_____
Roofing Contractor Firm

_____
Signature of Authorized Person

_____ (SEAL)
Title

_____
Witness

PART 1 GENERAL

1.1 SUMMARY

A. Section Includes:
1. Drawings, the general provisions of the Contract, including General and Supplementary Conditions and Division 01 requirements apply to work in this Section
2. Single-ply thermoplastic roofing system, insulation, flashing and roofing accessories, integrally related to roof installation,
3. Manufacturer's Notice of Intent to Issue Roof Warranty form, to be submitted as part of the Product Data submittals as defined by section 01300.
4. Applicator Warranty for Roofing form, to be submitted upon completion of the project.

B. Related Sections:
1. Section 02070 – Selective Demolition
2. Section 06100 – Rough Carpentry: Wood nailers, blocking and curbs.
3. Section 07565 – Preparation for Re-Roofing
4. Section 07620 - Sheet Metal Flashing and Trim

1.2 REFERENCES

A. ASTM International
1. ASTM D 471 - Test Methods For The Effects of Rubber- Liquid Properties
2. ASTM D 751 - Test Method of Coated Fabrics
3. ASTM D 882 - Test Method for Tensile Properties of Thin Plastic Sheathing
4. ASTM D 1204 - Test Method for Linear Dimensional Changes of Non-rigid Thermoplastic Sheeting or Film at Elevated Temperature
5. ASTM D 2136 - Test Method for Coated Fabricates -Low Temperature Bend Test
6. ASTM D 2240 - Test Method for Rubber Property
7. ASTM D 6754 - Standard Specification for Ketone Ethylene Ester Based Sheet Roofing
8. ASTM E 84 - Test Method for Surface Burning Characteristics of Building Materials

B. NFPA
1. NFPA 255 - Test of Surface Burning Characteristics of Building Materials

C. FM Global
1. FM - Roof Assembly Classifications
2. FM DS 1-28 – Wind Loads to Roof Systems and Roof Deck Securement
3. FM 4450 – Approval Standard for Class 1 Insulated Steel Deck Roofs

D. NRCA (National Roofing Contractors Association)
   1. NRCA - Roofing and Waterproofing Manual

E. Underwriters Laboratories, Inc.
   1. UL - Fire Hazard Classifications
   2. UL 723 - Tests for Surface Burning Characteristics of Building Materials
   3. UL 790 – Tests for Fire Resistance of Roof Covering Materials.
   4. UL 1256 – Fire Test of Roof Deck Construction
   5. UL 1897 – Uplift Tests for Roof Covering Systems.

1.3 PROJECT DESCRIPTION

A. Mechanically attach at all roof areas a white, smooth surfaced, PVC / Elvaloy based thermoplastic single-ply membrane with woven polyester fabric reinforcement over the following rigid insulation system:
   1. New 1/4" thick gypsum roof board which has been minimally secured over a new rigid polyisocyanurate insulation.
   2. New polyisocyanurate rigid board which has been minimally secured over a new fiberglass base sheet. This project uses a mixture of tapered and non-tapered rigid insulation as defined in this section and by the roof plan.
   3. New fiberglass vented base sheet that is minimally mechanically fastened to the existing light weight insulating concrete substrate.

   Securement of the new membrane is thru the cover board, rigid insulation, existing lightweight insulating concrete, and into the underlying metal decking. Single ply flashing shall be fully adhered to transition surface at all base flashing conditions.

B. The thermoplastic single-ply membrane shall also be mechanically fastened as required by the manufacturer’s engineering to comply with specified wind pressure requirements. Upon completion, a 20 year NDL manufacturer’s weathertightness warranty with a wind rider for the project design pressures is to be provided.

1.4 SUBMITTALS

A. Submit under provisions of Division 01.

B. Product Data: Provide membrane materials, base flashing materials, insulation, fanfold insulation board and vapor retarders.

C. Manufacturer's Installation Instructions: Indicate special precautions required for seaming the membrane.

D. Manufacturer's Certificate: Certify that products meet or exceed specified requirements.

E. Manufacturer's Field Reports: Submit under provisions of Division 01.

F. Contractor shall submit certification from a Florida Registered Engineer showing that the new roof system meets or exceeds current ASCE 7 requirements. (Provide supporting calculations or product approval testing.)

G. All products used shall be asbestos free.

1.5 QUALITY ASSURANCE

A. Perform Work in accordance with NRCA Roofing and Waterproofing Manual except where NRCA details differ from the project manual details.

B. Maintain one copy of the NRCA document on site.

C. Work that is closely associated with flexible sheet roofing, including vapor barriers, insulation, flashing and counterflashing, expansion joints (if applicable), and joint sealers, is to be performed by the installing applicator of the primary roofing system.

D. Manufacturer of the roofing materials shall provide qualified technical representatives to observe field conditions of surfaces and installation, quality of workmanship as applicable, and to make appropriate recommendations.

1.6 QUALIFICATIONS

A. Manufacturer: Company specializing in manufacturing the products specified in this section with five years current documented experience.

B. Applicator: A single installer specializing in performing the work of this section with three current years documented experience and approved by system manufacturer.
   1. The installation shall be done by a roofer approved in writing by the manufacturer of the thermoplastic material 10 days prior to Bidding.

C. Supervisor: Maintain a full-time non-working supervisor, on job site during roofing work in progress. Supervisor shall have five current years minimum documented experience of roofing work similar to scope of specified roofing.

D. Manufacturer's Field Inspection and Services Representative:
   1. Manufacturer of the roofing materials shall provide qualified personnel to observe field conditions of surfaces and installation, quality of workmanship as applicable, and to make appropriate recommendations.
   2. Representative shall visit the Project throughout progress of the work.
      a. Initial pre-installation meeting.
      b. Site visits at maximum of one week intervals.
      c. Prior to Substantial Completion inspection, a final inspection shall be made by manufacturer's representative.
      d. Called meetings.

1.7 REGULATORY REQUIREMENTS

A. Conform to applicable code for roof assembly fire hazard requirements and regulations of jurisdictional authorities, Florida Building Code.

B. All roofing materials to be Class A as tested in compliance with ASTM E 108 -Standard Test Methods for Fire Tests of Roof Coverings.

C. FM: Roof Assembly Classification, Class 1 Construction. Comply with current ASCE 7 and 2017 (Sixth) Edition Florida Building Code wind up-lift requirements for ultimate wind speed of **141 mph (109 mph Nominal/Actual)**

D. Thermal Resistance: Roofing system with thermal resistance properties of insulating materials, designated by R-values, as noted in Construction Documents. Combined values of existing and new materials must equal or exceed R-25.

E. Material Safety Data Sheets (MSDS): For all roofing products.

F. Contractor shall submit certification from a Florida Registered Engineer showing that the new roof system meets or exceeds current ASCE 7 and the 2017 (Sixth) Edition Florida Building Code wind pressure requirements for ultimate wind speed of **141 mph (109 mph Nominal/Actual)**. (Provide supporting calculations).

G. The contractor will be responsible for obtaining a Building Permit from the Building Department of the governing jurisdiction, and any required submittals and inspections thereafter. Signed and sealed copies of the construction documents will be provided by the Owner, all other required documentation is to be provided by the contractor.
   1. The Contractor is to complete and submit all required forms, license and insurance documentation prior to obtaining the building permit.
   2. The Contractor is to provide any required Product Approval information to the governing Building Department based on the specific project conditions and actual manufacturers and products to be used for this work.
   3. The Contractor is to verify the inspection requirements with the governing Building Department and obtain those inspections as required without impacting the progress of the work.

1.8 CERTIFICATION

A. Materials: For each material specified with a standard or reference material designation, certification labels shall appear on each package of bulk-shipments to project with certificate of compliance.

B. Installer: Provide two copies of all certification to Architect prior to beginning roofing work.

C. The Contractor: shall have pull tests conducted on the job site in compliance with Florida Building Code TAS 105 with the specified fasteners to determine the pull-out resistance of the existing deck. Submit the data to the Architect for review and approval before installation of any roofing materials.

D. The Contractor: shall confirm the roof deck is dry, (12% maximum by moisture meter testing), in compliance with Florida Building Code TAS 126 prior to or upon removal of the existing roof membrane system.

1.9 MOCK-UP

A. Provide mock-up of roof membrane system and associated components and accessories under provisions of Section 01450.

B. Mock-up Size: 10 x 10 feet, including gypsum cover board, and typical base and counterflashing specified; at location designated.

C. Mock-up may remain as part of the Work.

1.10 PRE-INSTALLATION CONFERENCE

A. Convene meeting one week prior to commencing work of this section at project site, with 72 hours minimum notice to participants. Meeting to include Contractor, Roofer, and Subcontractors, governing authorities, test agencies, product manufacturers, Architect and the Owner Representative.

B. Review requirements, Contract Documents, submittals, sequencing, availability of materials and installation facilities, proposed installation schedule, requirements for inspections and testing or certifications, forecasted weather conditions, governing regulations, insurance requirements, and proposed installation procedures.

C. Record discussion on matters of significance; furnish copy of recorded discussions to each participant. Discuss roofing system protection requirements for construction period extending beyond roofing installation/

1.11 DELIVERY, STORAGE AND HANDLING

A. Deliver to site, store, protect, and handle products under provisions of Division 01.

B. Deliver material in manufacturer's original, unopened containers with manufacturer's labels intact and legible.

C. Deliver material requiring fire resistance classification to the job with labels attached and packaged as required by labeling service.

D. Deliver enough material to allow continuous work.

E. Store rolls, cans and drums of cements, primers, and coatings, on end and over clean raised platforms.

F. Store and handle materials to protect them from.
   1. Moisture, whether due to precipitation, or condensation.
   2. Damage by construction traffic.
   3. Temperatures over 110 degrees F or below 40 degrees F.
   4. Temperatures over 110 degrees F or below 40 degrees F.
   5. Mud, dust, sand, oil and grease.

G. Select and operate material handling equipment and store materials to keep from damaging existing construction or applied roofing.

H. Immediately remove and dispose of wet materials.

I. Comply with fire, safety, and environmental protection regulations.

J. Do not store materials on roof decks, nor position roofing installation equipment on roof decks, in concentrations exceeding design live loads.

K. Take special precautions against traffic on roofing when ambient temperature is above 80 degree F. Avoid heavy traffic on the work during installation.

1.12 PROJECT CONDITIONS

A. Existing Conditions:
   1. The roofing applicator and sheet metal installer shall verify existing conditions, such as soundness of perimeter conditions, and varying deck and wall thickness for length of anchoring services required and other visible conditions prior to Bidding.
   2. Report conflicts and problems to the Architect for resolution prior to Bidding. Failure to report these conflicts and problems places the responsibility on the Prime Contractor to complete the work in accordance with the Documents at no additional cost to the Owner.
   3. Replace or restore to original condition any materials or work damaged during construction.
   4. Surfaces not designated to receive the system shall be properly masked or otherwise protected against accidental spillage or application of the material to those areas.
   5. Failure to install the work in strict accordance with provisions of this Section, is subject to total rejection of work specified herein.

1.13 ENVIRONMENTAL REQUIREMENTS

A. Do not apply roofing membrane during inclement weather and/or ambient temperatures below 40 degrees F.

B. Do not expose materials vulnerable to water or sun damage in quantities greater than can be weatherproofed during same day.

C. Proceed with roofing work when existing and forecasted weather conditions permit work to be performed in accordance with requirements of this section and warranty compliance requirements.

1.14 SAFETY REQUIREMENTS

A. All work shall be in compliance with OSHA safety standards and regulations with emphasis on Section 29 CFR 1910, including but not limited to the following requirements.
1. Provide facility administrator one day prior notice before commencing with work or moving to new areas.
2. Proper identification and clothing, to work at all times. Only the facility administrator is permitted in the facility.
3. The Contractor shall provide sufficient temporary barricades in order to contain passageways around tankers, trash chutes, hoisting areas and areas below roof edges where work is conducted.
4. Fire extinguishers are required, one on the ground and one on the roof deck.
5. Seal all possible seepage areas, before using liquids or adhesive materials.
6. Powder driven shot fasteners are not permitted.
7. No flammable or explosive substance or equipment for repairs or alterations shall be introduced in a building of normally low or ordinary hazard classification while the building is occupied unless the condition of use and safeguards provided are such as not to create any additional hazard or handicap to egress beyond the normally permissible conditions in the building.
8. Protect building and adjacent surfaces from spillage and repair or replace damaged materials at no cost to Owner.

B. All toxic substances enumerated in the Florida Substance List established pursuant to S.442.103 that are to be used in the construction, repair or maintenance of educational facilities are restricted to usage according to the following provisions:
1. Before any such substance may be used, the Contractor shall notify the Owner in writing at least three working days prior to using the substance. The notification shall contain:
   a. The name of the substance to be used;
   b. Where the substance is to be used; and
   c. When the substance is to be used.
2. The Owner shall take all reasonable actions to ensure that the Contractor complied with the safety precautions and handling instructions set forth in the material safety data sheet for each substance used by the Contractor so that usage of the substance poses no threat to the health and safety of residents, instructors and the general public.

C. All “hot work” in conjunction with this project shall be performed in compliance with the precautions defined within the “FM Global Hot Work Permit System”.

1.15 COORDINATION

A. Coordinate work under provisions of Division 01.

B. Coordinate the work with installing associated wood blocking and nailers, roofing, expansion joints and area dividers, and metal flashing as the work of this section proceeds.

1.16 SEQUENCING

A. Organize operations so work can simultaneously proceed on the various aspects including roofing and flashing so at the end of each day the work done that day will be substantially complete.

B. Roof area shall be substantially complete prior to beginning another roof area; utilize multiple crews for multiple roof area construction. Phasing of roof construction by area is not permitted.

C. Sequence equipment removal with covering of deck openings with plywood strong enough to prevent injuries from falling through. Contractor shall install waterproof covering over plywood and tie-in to existing membrane to achieve complete watertightness.

1.17 WARRANTY

A. Applicator's Warranty: **Two (2) year workmanship warranty**. (Refer to "*Applicator's Warranty for Roofing"* at end of this Section). Submit upon completion of Work.

B. Manufacturer's Warranty: **Twenty (20) year total roof system warranty** inclusive of roofing materials, included products and accessories from deck to finish membrane (Refer to *"Manufacturer's Notice of Intent to Issue Roof Warranty"* at end of this Section). Submit at time of bid.

C. Manufacturer's roof warranty will cover the cost of removal and replacement of damaged or wet insulation that is the result of leaks from poor workmanship or failed material.

D. A Project Acknowledgment Form shall be executed by the Manufacturer that acknowledges project design, lists primary/secondary material approvals, and pre-approved for roofing contractor.

E. A non-prorated, non-penal sum manufacturer's roof warranty is required.

F. Manufacturer's roof warranty will cover the cost of removal and replacement of damaged or wet insulation that is the result of leaks from poor workmanship or failed material.

G. The Contractor is responsible to submit and provide components required by the roofing system manufacturer for the specific warranty.

H. Warranty will not exclude from coverage damage to the roof system for wind gusts as defined in the **Manufacturer's Notice of Intent to Issue Roof Warranty** at end of this Section. Warranty may exclude damage for wind launched debris or projectiles which are not part of this system.

I. A Contractor's Final Statement of Compliance shall be issued by the roofing contractor.

PART 2 PRODUCTS

2.1 THERMOPLASTIC ROOFING SYSTEM

A. New single-ply thermoplastic roofing membrane shall be smooth backed and intended to be mechanically fastened to the underlying roof structure from one of the two following category of chemical composition. Roofing membrane system shall have Florida Product Approval and comply with ASCE 7 and the 2017 (Sixth) Edition Florida Building Code wind uplift requirements as defined by the documents for this project:

1. PVC thermoplastic, 80 mil minimum thickness, polyester reinforced membrane which meets or exceeds all requirements of ASTM D 4344, Type III. Color is to be neutral cream, light gray or white. Approved products are as follows:

a.	Carlisle / Syntec	Sure-Flex PVC 80
b.	Duro-Last Roofing, Inc.	Duro-Last 80
c.	Flex Membrane International	Flex 80
d.	GAF Materials Corporation	EverGuard EGSR 80
e.	Johns Manville	JM PVC 80
f.	Sika Sarnifil	S327 80
g.	Siplast	Parasolo PVC 80
h.	Soprema	Sentinel P150 80
i.	Versico	VersiFlex PVC 80

2. Elvaloy (KEE) thermoplastic, 60 mil minimum thickness, polyester reinforced membrane which meets or exceeds all requirements of ASTM D-4434, Type III or D 6754, and with a minimum Elvaloy content of 25% by weight. Color is to be neutral cream, light gray or white. Approved products are as follows:

a.	Carlisle Syntec Systems	Sure-Flex KEE Membrane
b.	Duro-Last, Inc.	Duro-Last EV Membrane
c.	Flex Membrane International	Flex MF/R Membrane
d.	GAF Building Products	Everguard PVC XK Membrane
e.	Johns Manville	JM PVC Membrane
f.	Seamen Corporation	Fibertite 8540 SM Membrane

g. At the contractor's option, a fleece-backed membrane may be used of equivalent or greater PVC membrane thickness.

B. Manufacturers and Approved Products:

1. Obtain primary thermoplastic roofing from a single manufacturer and provide secondary materials only as recommended by the manufacturer of the primary material, as specified.
2. The Drawings are generic and not based on a specific manufacturer. Detail deviations will be accepted so as to permit utilization of the selected manufacturer's standard products and details when, in the Design Professional's judgment, such deviations do not materially detract from the original design concept or intended performance.
   a. Submit proposed deviations to Design Professional for approval in writing prior to ordering materials that are in the category of substitutions.
3. Membrane substitutions are not permitted without prior approval by the architect.

2.2 SHEET MATERIALS

A. Venting Base Sheet: ASTM D-4897, Type G-2 coated base sheet with course granular surfacing for cross-ventilation, nominal weight of 70 pounds per roofing square. Acceptable manufactures and products are as listed below.
   1. Johns Manville Ventsulation
   2. Firestone Venting Base
   3. Soprema 4897 Sheet
   4. Architects approved (prior to bidding) equivalent.

B. Modified Bitumen "Dry-in" Membrane material: 40 mil (1 mm) minimum total thickness, polyester reinforced, SBS modified asphalt waterproofing and underlayment membrane sheet, single-sided, self-adhesive, with a strippable treated release paper. Factory or field cut if necessary, to the size required by the details.
   1. Approved Products:
      a. Boral TileSeal HT.
      b. InterWrap Titanium PSU.
      c. Protecto-Wrap Rainproof-40.
      d. Soprema Sopralene Stick.
      e. Tamko TW Metal and Tile.
      f. Architect approved (prior to bidding) equivalent product.

2.3 MECHANICAL FASTENERS

A. For mechanically fastened anchorage of the new roof membrane: Fastener type and attachment pattern to be as defined by the manufacturer based on the specific project conditions and published test reports for their product.

B. For mechanically fastened anchorage of the new fiberglass base sheet to lightweight concrete deck provide a FM and Metro-Dade tested fastener intended for this type of deck, basis of design is “FM 90” as manufactured by ES Products with an integral FM 1-90 disc. Comply with Factory Mutual Approval Standard #4470.

C. For fastening flashing to wood: Stainless steel annular threaded, 11 or 12 gage shanks, 1" long, driven through a minimum 30 gage 1" diameter flat stainless steel cap.

D. For all other locations: Provide size, type, material and finish as required, matching material being fastened.

E. All fasteners which penetrate the steel deck at a location exposed to view by the public from the underside must be coated white to match the roof deck.

2.4 ROOF MEMBRANE ADHESIVE

A. Membrane Adhesive:
1. Manufacturer approved adhesive for selected membrane.

2.5 INSULATION AND ROOF COVER BOARD ADHESIVE (Option)

A. Provide an FM Listed insulation adhesive, or an adhesive approved by the roofing system manufacturer, including the following:

1.	Chem-Link Advanced Arch. Products	Roof Assembly Adhesive
2.	Insta-Foam Products, Inc.	Insta-Stik Prof. Roofing Adhesive.
3.	Olympic Manufacturing Group, Inc.	OlyBond Adhesive Fastener
4.	PolyFoam Products, Inc.	Tite-Set Roofing Adhesive

2.6 INSULATION

A. Polyisocyanurate Insulation: Closed cell glass fiber reinforced type, conforming to the following:
1. Board Density: 2.0 pounds per cubic foot.
2. Board Size: 4 feet x 4 feet or 4 feet x 8 feet.
3. Board thickness and taper as shown by the roof plan and as follows:
   a. Roof Area “A”: Install 1/8” per foot tapered rigid insulation at the northwest and southeast third of the roof, starting at 1.3” thickness at the drip edges. Followed by 1/4" per foot tapered rigid insulation at the center third of the roof.
   b. Roof Area “B”: Install 1/8” per foot tapered rigid insulation, 4 feet wide at the perimeter drip edge of this roof area, starting at 1.3” thickness at the drip edges. Followed by 1.8” thickness non-tapered rigid insulation within the sloped field of the roof.
   c. Roof Area “C”: Install 1.3” thick non-tapered rigid insulation throughout the field of the roof.
   d. Tapered Crickets: 1/2" per foot tapered board to counter primary slope.

4. Compressive Strength: 25 psi per ASTM D 1621
5. Facing: Factory applied skin of glass fiber facing on both faces.
6. Board Edges: Square.
7. Water Absorption: Maximum of 1% (volume) in accordance with ASTM C209.
8. Foam Core Flame Spread: 25 Max. - ASTM E-84 (Tunnel Test).
9. UL Fire Rating: Conforms to ANSI / UL, Class A.

B. Tapered Edge Strips for Use with Tapered Insulation: 12" wide, 1/2" per foot tapered preformed units of material matching insulation at crickets, see plans.

C. Batt Insulation: ASTM C665; preformed glass fiber batt conforming to the following:
1. Thermal Resistance: R of 19 for walls. R of 13 for expansion joint curbs.
2. Facing: Faced on one side with asphalt treated Kraft paper.
3. Flame/Smoke Properties: In accordance with ASTM E84.

2.7 GYPSUM ROOF BOARD

A. Gypsum Roof Board (Glass fiber reinforced/faced gypsum): as approved for use within a 20 year warranted roof system by the roofing manufacturer, with the following characteristics:
1. Board Type: manufacturer standard product for use over polyisocyanurate insulation and over metal decks.
2. Manufacturer and Product: Georgia-Pacific Corporation, Gypsum Division, Dens-Deck Prime Roof Board or approved equal.
3. Board Size: 4 feet x 4 feet or 4 feet x 8 feet.
4. Minimum Thickness: 1/4" thick.
5. Compressive Strength: Nominal 900 psi in accordance with ASTM C 473
6. Water Absorption: Maximum 10% in accordance with ASTM C 1177
7. Board Edges: Square.
8. UL Fire Rating: Conforms to ANSI/UL, Class A.
9. Flame Spread/Smoke Developed: ASTM E 84 – 0/0

B. Contractor’s Option: Gypsum Roof Board (Glass fiber reinforced with no face layer) : as approved for use within a 20 year warranted roof system by the roofing manufacturer, with the following characteristics:
1. Board Type: manufacturer standard product for use over polyisocyanurate insulation and over metal decks.
2. Manufacturer and Product: United States Gypsum Company, Securock Roof Board or approved equal.
3. Board Size: 4 feet x 4 feet or 4 feet x 8 feet.
4. Minimum Thickness: 1/4" thick.
5. Compressive Strength: Nominal 1800 psi in accordance with ASTM C 473.
6. Water Absorption: 10% in accordance with ASTM C 1177
7. Board Edges: Square.
8. UL Fire Rating: Conforms to ANSI/UL, Class A.
9. Flame Spread/Smoke Developed: ASTM E 84 – 5/0

2.8 WOOD

A. See Section 06100 – Miscellaneous Rough Carpentry

2.9 DOUBLE SIDED ADHESIVE FLASHING TAPE

A. Flashing Tape: Double sided, grey extruded or preformed, 99% solids, crosslinked polyisobutylene compound, non-sag, non-toxic, non-staining, permanently elastic self-adhesive tape. 1/8" minimum thickness, 3/4" minimum width unless noted otherwise on the drawings.
1. Pecora Corporation Extru-Seal Glazing Tape
2. Tremco Construction Products 440 II Tape
3. Equivalent products as approved by the Owner and Architect

2.10 SEALANTS: As specified in Section 07900.

2.11 SEALANT PRIMER: As recommended by the sealant manufacturer to suit application.

2.12 MISCELLANEOUS MATERIALS:

A. All other materials and accessories, not specifically described, but required for a complete and proper installation of roofing, shall be products of, or recommended by the primary roof material manufacturer and with Architect's approval.

PART 3 EXECUTION

3.1 GENERAL

A. Total Installation Concept:
1. The specified system is a total roofing system, not a patched up, chopped up, spliced or added to or on roofing system. Therefore, this type of application will not be acceptable.
2. If a section of roof requires reworking or patching, the entire area or section of roofing shall be replaced. This shall mean from edge to edge of roof.

B. Manufacturer's Installation Requirements:
1. In addition to the specified procedures, the roofing installer shall install roofing in accordance with the procedures required by the roofing material manufacturer for the proper execution of the work and issuance of the warranty.
2. The roofing installer shall review the specified procedures for possible conflicts, prior to Bidding, for resolution by Architect.

C. Watertightness Imperative:
   1. The work specified shall not preclude the use of procedures that will maintain the building watertight. Therefore, the Contractor, while conforming to these contract documents, shall utilize skill and procedures to keep water out of these buildings while construction is in progress.
   2. At the end of each day's roofing installation and prior to the onset of inclement weather, the new section of roofing shall be temporarily sealed with cut-offs to the unfinished substrates, projections through the roof and to the surrounding intersections so that no moisture may enter roofing or into structure before work resumes. Remove cutoffs before work resumes.

D. Insurance Code Compliance:
   1. Install system for (and test where required to show) compliance with governing regulations and with the following requirements.
      a. Underwriters Laboratories “Class A” Fire Classified.
      b. Current Florida Building Code and ASCE 7 wind up-lift resistance criteria

E. Coordinate the installation of insulation, roofing sheets, flashing, stripping, coatings and surfacings, so that membrane edges are not exposed to precipitation or exposed overnight. Provide cutoffs at end of each day's work to cover exposed sheets and insulation.

F. Environmental Impact: Ensure that fresh air intakes in the area of new roofing construction are properly sealed or filtered. Coordinate user requirements for temporary equipment shutdown as needed

G. Interior Work: Coordinate installation of associated ceiling repairs with user schedules and peak-use times.

H. Off Hour Work: The following roof construction activities must be coordinated and scheduled to occur while those spaces immediately below the required work are not occupied.
   1. Removal or installation of heavy roof top equipment.
   2. Structural and/or deck repairs
   3. Loading or unloading of materials.
   4. Any interior (below structural roof deck) work.

3.2 EXAMINATION

A. Verify that surfaces and site conditions are ready to receive work.

B. Verify deck is supported and secured.

C. Verify deck is clean and smooth, free of depressions, waves, or projections, properly sloped to eaves.

D. Verify deck surfaces are dry.

E. Verify roof openings, curbs, pipes, conduit, sleeves, ducts, roof drains and vents through roof are solidly set.

F. Roof membrane manufacturer's technical representative is to inspect the roof deck / substrate conditions prior to application of roofing materials to verify the substrate is acceptable to receive the proposed roofing system in compliance with the appropriate Florida Product Approval Installation Instructions. A written report stating such is to be submitted to the Owner and Architect for their review and records

3.3 INSTALLATION REQUIREMENTS

A. Protect other work from spillage of roofing materials and prevent liquid materials from entering or clogging drains and conductors. Replace/restore other work damaged by installation of roofing system work.

B. Insurance/Code Compliance: Install system for (and test where required to show) compliance with governing regulations and with the following requirements:
1. Underwriters Laboratories "Fire Classified" and "Class A", the 2017 (Sixth) Edition Florida Building Code and ASCE 7 for **Nominal 109 mph ; Ultimate 141 mph** wind up-lift resistance.

3.4 PREPARATION – EXISTING LIGHTWEIGHT INSULATING CONCRETE DECK

A. Test moisture content to verify it is below 12% in compliance with the building code.

B. Smooth rough spots and sweep all surfaces clean

C. Fill surface honeycomb and variations with manufacturer's approved filler material

D. "Divot" repair as a result of existing roof tear-off is to be considered part of the base bid services, and not part of the unit price costs, (Applies to "existing" only).

3.5 APPLYING BOARD INSULATION SYSTEM

A. General:
1. The Contractor shall confirm all field dimensions for proper sizing of board in relation to the existing deck, cut board as required to fit in between.
2. Install only as much board insulation in any one day as can be covered by the completed membrane in the same day.
3. Ensure substrate, base sheet or preliminary roof membrane is clean and dry.

B. Vented Base Sheet:
1. Start with 18" width at the low edge, followed by full width sheets, granules down against the existing lightweight insulating concrete (LWIC).
2. Lap the base sheet 4 inches at edges and 6" at ends.

3. Mechanically fasten base sheet to LWIC or steel deck as needed to secure during the rigid insulation placement.
4. At parapet walls and internal curbs, extend the vented base sheet up the walls 8" minimum and secure as needed.

C. Rigid Board Insulation Attachment and Gypsum Roof Board Installation:
1. Ensure vented base sheet is clean and dry, laid flat and secured as needed.
2. Minimally adhere insulation boards with adhesive over the vented base sheet and existing lightweight insulating concrete, mechanically fasten to the existing metal roof deck below only if necessary to secure temporarily.
3. Apply boards laid in parallel courses with long joints continuous and no joints broken. Mitering of taper boards at valleys and/or hips, in lieu of lacing is required.
4. Edge of boards shall be butted firmly to adjoining board with no gaps. Smooth any surface irregularities or unevenness between boards in top layer of boards prior to roofing.
5. Contractor shall insure that slopes indicated on the drawings are "finish" slopes, regardless of irregularities and deviations in the roof deck or substrate.
6. Install crickets on "high" side of roof top equipment curbs prior to installation of the gypsum roof board. Adhere with a manufacturer approved insulation adhesive.
7. Upon completion of insulation placement, minimally adhere 1/4" gypsum roof board over the rigid insulation, (stagger joints), mechanically fasten to the existing metal roof deck below only if necessary to secure, or required by the roofing manufacturer.
8. Prior to roof membrane application, remove excess dust from surface of board insulation by brooming, blowing and/or vacuuming.

3.6 APPLYING THERMOPLASTIC ROOFING SYSTEM

A. General:
1. Organize the various aspects of the work so at the end of each day the area completed on that day is substantially complete.
2. Due to the site conditions, the applicator may install individual panels, or pre-fabricate sections with appropriate anchorage tabs prior to positioning membrane on the sloped roof sections.

B. Field Sheets:
1. Rolls shall be installed straight to chalk lines maintaining the best lay flat characteristics possible.
2. Apply membrane smooth, free from air pockets, wrinkles, or tears.
3. Mechanically fasten through the new rigid insulation system, vented base sheet and existing LWIC to the underlying steel deck in accordance with the prescribed attachment requirements as determined by ASCE 7 wind uplift criteria.

4. Adjoining rolls shall overlap the fastened edge a minimum of 4" maintaining proper shingling to avoid back water seams. (See manufacturer's details for fastener spacing location).

C. Mechanical Attachment:
1. Roll the panel (or prefabricated roll) out along the chalk line 24' and adjust the roll so that panel is lying flat and square to the line. Pull the roll snug (not taut) and fasten with approved fasteners and stress plate according to the manufacturer specified spacing along the uphill edge.
2. If working with prefabricated panels, fasten each tab snug; starting at the top and continue down-slope to secure each tab in sequence with the adhesive application, until the entire roll has been fastened. Refer to the manufacturer's approved fastening pattern.
3. If working with individual rolls, fasten the upslope edge of the roll according to specified fastener spacing requirements prior to overlapping the next roll. Lap rolls a minimum of 4" and a maximum of 6", staggering the factory seams so that each seam will fall an equal distance between the factory seams, roll to roll.
4. Fasten the side laps of the roll with fasteners and stress plates per panel. (See manufacturer's details for proper spacing and location of side lap fastener pattern.) Allow a minimum of two inches (2") from the edge of the stress plate to the edge of the overlapping membrane side lap to leave sufficient room to apply the field welded seam (minimum 1.5 inches) and to avoid back water seams or water dams.

D. Adhesive Procedures:
1. The amount of substrate that can be coated with a workable amount of adhesive will be determined by application method, ambient temperature, humidity and available manpower.
2. To ensure proper application and curing of the adhesive, it is recommended that the outside air temperature be above 40 F.
3. Adhesive may be applied by roller or by spraying.
4. Roller applied adhesive should utilize a solvent resistant 1/2" nap roller.
5. Spray applied adhesive must be spread out by roller to insure a smooth, even, 100% coverage of the substrate with no globs, puddles or similar irregularities.
6. Allow the solvents in the adhesive to dissipate to the point that the adhesive is stringy to the touch. Do not allow adhesive to “dry out” completely.

E. Hot Air Welding:
1. General:
   a. All field seams exceeding 10 feet in length shall be welded with an approved automatic welder, unless not possible due to project conditions.
   b. All field seams must be clean and dry prior to initiating any field welding.
   c. Remove foreign materials from the seams (dirt, oils, etc.) with acetone or approved alternative. Use clean cotton cloths and allow

approximately five minutes for solvents to dissipate before initiating the automatic welder. Do not use denim or synthetic rags for cleaning.

d. All welding shall be performed only by qualified personnel to ensure the quality and continuity of the weld.

2. Hand Welding

a. The lap or seam area of the membrane would be intermittently tack welded to hold the membrane in place.

b. The back “interior” edge of the membrane shall be welded first, with a thin, continuous weld to concentrate heat along the exterior edge of the lap during the final welding pass.

c. The nozzle of the hand-held hot air welder shall be inserted into the lap at a 45° angle to the lap. Once the polymer on the material begins to flow, a hand roller shall be used to apply pressure at a right angle to the tip of the hand welder. Properly welded seams shall utilize a 1-1/2" wide nozzle, to create a homogeneous weld, a minimum of 1-1/2" in width.

d. Smaller nozzles may be used for corners and other field detailing, maintaining a minimum 1" weld.

3. Automatic Machine Welding:

a. Proper welding of the membrane can be achieved with a variety of automatic welding equipment. Refer to manufacturer’s specific recommendations and requirements.

b. Follow all manufacturer’s instructions for the save operation of the automatic welder.

c. Follow local code requirements for electric supply, grounding and surge protection.

d. The use of a dedicated, portable generator is highly recommended to insure a consistent electrical supply, and avoid fluctuations that can interfere with weld consistency.

e. Properly welded seams shall utilize a 1-1/2" wide nozzle, to create a homogeneous weld, a minimum of 1-1/2" in width.

3.7 FLASHING

A. Clean all vents and stacks to bare metal. All protrusions must be properly secured to the roof deck with approved fasteners. Remove and discard all lead, pipe and drain flashing. Flash all penetrations according to approved details.

B. Remove all loose and/or deteriorated flashing.

C. All flashing shall be fully adhered to properly prepared, approved substrates with manufacturer’s recommended mastic applied in sufficient quantity to insure total adhesion.

D. The base flange of all membrane flashing shall extend out on to the plane of the deck, beyond the wood nailer to a maximum width of 8 inches.

E. Vertical flashing shall be terminated no less than 8 inches above the plane of the deck with approved termination bar and counterflashing or metal cap flashing.

F. Complete all inside and outside corner flashing details with the manufacturers preformed corners or an approved field fabrication detail.

G. Probe all seams with a dull pointed probe to ensure the weld has created a homogeneous bond.

H. Install penetration accessories in strict accordance with approved details. Ensure penetrations accessories have not impeded in any way the working specification.

3.8 METAL FLASHING

A. Perimeter edge details are to be fabricated from 0.040” thick aluminum laminated with a 0.020 mil polymeric coating. Interior flashing metal (not visible from ground) shall be 24 gauge stainless steel. Refer to Section 07620 – Sheet Metal Flashing and Trim.

B. Fasten all metal flashing to wood nailers or approved substrate with approved fasteners as defined within the fastening schedule shown on drawing B01.

C. Break and install coated metal in accordance with approved details. Ensure proper attachment with 1/4 inch expansion joints and the installation of a minimum 2 inch bond breaker tape prior to sealing the joint.

3.9 COMPLETION

A. Remove any and all debris, excess materials and scrap of any kind from the roof and surrounding premises prior to demobilization.

B. Inspect all field welds, detailing and terminations to insure a 100% watertight installation.

3.10 FIELD QUALITY CONTROL

A. Field inspection and testing will be performed under provisions of Contract Documents.

B. Correct identified defects or irregularities.

C. Require site attendance of roofing and insulation materials manufacturers during installation of the Work.

3.11 TOUCH-UP PAINTING

A. Any fasteners which penetrate the steel deck at a location exposed to view by the public from the underside which do not match the finish of the underside of the roof deck must be coated or painted white to match the roof deck.

3.12 CLEANING

A. In areas where finished surfaces are soiled by work of this section, consult manufacturer of surfaces for cleaning advice and comply with their instructions.

B. Upon completion of work, clean entire roof surface with a cleaning solution as recommended by the manufacturer and rinse with medium pressure water, (1,300 psi minimum, 2,700 psi maximum).

C. Repair or replace defaced or disfigured finishes caused by work of this section.
1. Trash and scraps are a hazard and shall be collected and disposed of immediately.
2. The applicator shall remove all masking protection equipment, materials and debris from the work and storage areas and leave those areas in an undamaged and acceptable condition.
3. Where existing sod has been damaged, install new sod in an acceptable manner blending the edges of new sod to existing surrounding sod.
   a. Do not place new sod over existing sod. Excavate so that top plane of new sod will conform to adjacent plane of existing sod. Match new sod with existing sod type

3.13 PROTECTION

A. Protect building surfaces against damage from roofing work.

B. Protect surfaces where traffic must continue over finished roof membrane.

C. Upon completion of roofing work (including associated work) advise Owner of recommended procedures for surveillance and protection of roofing during remainder of construction period. At the end of the construction period, or at a time when remaining construction work will in no way affect or endanger roofing, make a final inspection of roofing and prepare a written report to Owner and Architect describing nature and extent of deterioration or damage, if any, found in the work.

D. Repair or replace deteriorated or defective work found at time of final inspection. Repair damages to roofing which occurred subsequent to roofing installation and prior to final inspection.

E. Repair or replace the adjacent roofing and associated work outside the scope of work of this contract but damaged by the work of this contract to a condition free of damage and deterioration at time of substantial completion.

END OF SECTION

MANUFACTURER'S NOTICE OF INTENT TO ISSUE ROOF WARRANTY

Thermoplastic Single-ply Roofing

Whereas
herein called the "Roofing System Manufacturer" hereby gives notice to:

Owner:

Address:_____
of its Notice of Intent to issue its Roof Warranty, to the Owner for the Project,

Project:_____

Address:_____
incorporating the Manufacturer's_____
roofing system or product is installed in accordance with the Contract Documents.

A. Manufacturers' Notice of Intent to Issue Roof Warranty in conformance with the Contract Documents shall be executed by the manufacturer and attached to the bid submittal. Each Bidder shall submit a single form, only from the specified manufacturer, and shall include items 1 and 2 as follows:

1. A detailed description of the components of the manufacturer's system proposed and a list of any other component and accessories, proposed for use in the system that is provided by other manufacturers or suppliers.

   a). A statement that the Manufacturer's Representative has thoroughly reviewed the project requirements defined by the project document, (plans, specifications & details). Having reviewed the above items and project requirements in detail, the Representative will provide a written response to the Design Professional ten days prior to the bid date, if conflicts between the Manufacturer's requirements occur with the above listed documents.

2. A sample of the Manufacturer's Roof Warranty shall be attached to and submitted with this form and the bid package. The manufacturer shall delete all exceptions relative to system failure from high wind conditions based on one of the following options:

   a). Uplift pressures due to any locally recorded wind speed of 109 mph or less.

   . . . . . or . . . . . .

   b). Uplift pressures below the following "Unfactored / (Nominal) Wind Uplift Pressures as calculated per the applicable Florida Building Code and ASCE 7 calculation methods:
   1) Interior of Roof (Zone 1): - 34 psf
   2) Perimeter of Roof (Zone 2): - 52 psf
   3) Corners of Roof (Zone 3): - 74 psf.

3. **Twenty (20)** year total roof system warranty inclusive of all new roofing materials, all associated products and accessories, including all metal flashings, from lightweight insulating concrete roof substrate / deck to finish membrane, whether supplied by the membrane manufacturer or by a manufacturer approved / recommended third-party supplier.

Provide a “No Dollar Limit”, single source responsibility, non-deductible roofing warranty inclusive of all material and labor in full compliance with all the requirements of the project specifications.

a). The manufacturer shall modify the roof warranty to include total labor coverage for the warranty period and to Cover damage to roof materials and insulation down to the roof deck resulting from water penetration.

b). The manufacturer shall modify the roof warranty to state that the Owner has the right to make emergency repairs without voiding the warranty if the manufacturer or applicator does not respond within 24 hours to notification by the Owner of a defect or leak.

c). The manufacturer shall modify the roof warranty to state that annual inspections with written reports by the Owner, and resulting maintenance, are sufficient to fulfill the periodic inspection requirements of the manufacturer’s warranty.

d). The warranty shall be governed by the laws of the State of Florida. The sole and exclusive venue for any litigation arising from or related to this Warranty or any work performed under the terms of this Warranty, shall be in St. Johns County, Florida.

4. The manufacturer's Representative shall conduct a Post-Construction field inspection no earlier than **eleven (11) months**, and no later than **twelve (12) months** after the Date of Substantial Completion. Submit a written report within seven (7) days of this visit to the Owner's Maintenance Dept. listing observations, conditions and any recommended repairs or remedial action.

5. The manufacturer will, during the second (2nd), and fifth (5th), year of this warranty, inspect the roof system and provide a written Executive Summary of the Roof Condition to the Owner.

Further, the manufacturer acknowledges that the applicator:

Roof Applicator’s Name:_____

Address: _____

has been approved to install this roof system since _____, _____ and meets the criteria for an approved applicator listed in the Project Manual.

By signing the above, the Authorized Representative of said Manufacturer certifies and represents the Roofing System Manufacturer with the authority to contract and make the above representations to the Owner.

By: _____ Date:
Signature of Authorized Representative

Name:_____ Title:

Witness:_____ Date:

APPLICATOR'S WARRANTY FOR ROOFING

Whereas _____

of (Address)_____

herein called the "Roofing Contractor", has performed roofing, flashing and sheet metal and associated ("work") on following project:

Owner:_____

Address:_____

Name and Type of Building:_____

Address:_____

Area of Work:_____

Date of Acceptance:_____

Warranty Period: **Two (2) Years** Date of Expiration:

The Roofing Contractor hereby certifies to the Owner as a "Final Statement of Compliance" that the finished roof membrane (and insulation) system was installed in compliance with the approved contract documents.

AND WHEREAS Roofing Contractor has contracted (either directly with Owner or indirectly as a subcontractor) to warrant said work against leaks, faulty or defective materials, seam failure, improper attachment of roofing to decking or insulation to decking, waves and fish-mouths in the sheet waterproofing, improper flashing attachment, water ponding, improper installation of roof drains and scuppers, improper installation of roof curbs, roofing components deemed faulty or in disrepair, and workmanship for designated the Warranty Period.

NOW THEREFORE Roofing Contractor hereby warrants, subject to terms and conditions herein set forth, that during Warranty Period he will at his own cost and expense, make or cause to be made such repairs to or replacements of said work as are necessary to correct faulty and defective work, and as are necessary to maintain said work in watertight condition.

This Warranty is made subject to the following terms and conditions.

1. Specifically excluded from this Warranty are damages to roofing work and other parts of the building, and to building contents, caused by: a) lightning, windstorm; b) fire; c) failure of roofing system substrate or structure (including cracking, settlement, excessive deflection, deterioration, and decomposition). When work has been damaged by any of the foregoing causes, Warranty shall be null and void until such damage has been repaired and until cost or repairs has been paid by the Owner or by another responsible party as so designated.

2. The Roofing Contractor is responsible for damage to work covered by this Warranty, including consequential damages to building or building contents, resulting from leaks or faults or defects of work.
3. The Owner shall promptly notify Roofing Contractor of observed, known or suspected leaks, defect, disrepair or deterioration. The Contractor shall guarantee to respond to all notifications within twenty-four (24) hours and to make all such repairs as deemed necessary to correct said leaks or defects to a satisfactory condition to the Owner. Repairs shall be made by workman in the current employment of the Contractor. Subcontracting of repair work is not permitted.
4. The definition of faulty roofing components or roofing in disrepair includes, but is not limited to the following:
   A. Blisters in roofing.
   B. Improper attachment of roofing to decking or insulation to decking.
   C. Cracks or ridging in roofing membranes.
   D. Delamination, shears or tears in membrane.
   E. Improper flashing attachment.
   F. Water ponding.
   G. Improper installation of roof drains and scuppers.
   H. Improper installation of roof curbs.
   I. Defects in the quality of work or materials.
   J. Leaks of any kind.

5. This Warranty is recognized to be the only warranty of the Roofing Contractor on said work, and shall not operate to restrict or cut off Owner from other remedies and resources lawfully available to him in cases of roofing failures. Specifically, this Warranty shall not operate to relieve Roofing Contractor of responsibility for performance of original work in accordance with requirements of the Contract Documents, regardless of whether Contract was a contract directly with Owner or a subcontract with Owner's General Contractor.

IN WITNESS THEREOF, this instrument has been duly executed this

_____day of_____, 20____.

_____
Roofing Contractor Firm

_____
Signature of Authorized Person

_____ (SEAL)
Title

_____
Witness

PART 1 GENERAL

1.1 SECTION INCLUDES

A. Removal of existing thermoplastic single-ply roofing membrane, and associated construction materials in preparation for installation of the specified roof system, and any other work necessary within the scope of this project.

B. Remove abandoned equipment and infill structural deck

1.2 RELATED SECTIONS

A. Section 02070 - Selective Demolition.

B. Section 06100 – Rough Carpentry

C. Section 07530 – Thermoplastic Single-ply Membrane Roofing.

D. Division 16 for requirements in regard to electrical work.

1.3 REFERENCES

A. ASTM C208 - Insulating Board (Cellulosic Fiber), Structural and Decorative.

1.4 SYSTEM DESCRIPTION

.

A. Remove any roof mounted equipment as needed to properly repair and or replace the associated roof penetration flashings.

B. Complete removal of any and all materials required to properly perform the repairs to existing curtainwall system and the installation of the specified roofing and flashing systems shown by these documents.

1.5 QUALIFICATIONS

A. Materials Removal Firm: Company specializing in performing the work of this Section with minimum three years experience.

1.6 PRE-INSTALLATION CONFERENCE

A. Attend conference specified in Division 01.

1.7 ENVIRONMENTAL REQUIREMENTS

A. Do not compromise existing roofing membrane, or building envelope by leaving open or unsealed penetrations through the roof deck and/or building walls when weather conditions threaten the integrity of the building contents or intended continued occupancy.

B. Maintain continuous temporary protection prior to and during installation of new roofing system.

1.8 SCHEDULING

A. Schedule work under the provisions of Division 01.

B. Schedule work to coincide with commencement of new construction.

1.9 COORDINATION

A. Coordinate work under provisions of Division 01.

B. Coordinate the work with other affected mechanical and electrical work associated with roof penetrations.

PART 2 PRODUCTS

2.1 MATERIALS

A. Temporary Protection: Sheet polyethylene; provide weights to retain sheeting in position.

B. Protection Board: ASTM C208, Roof Insulating Board type, cellulose fiber board.

C. Self-Adhesive SBS Modified Bitumen Underlayment and Flashing Membrane: Rubberized (SBS) asphalt bonded to a polyester or fiberglass reinforcing mat, 40 mil (1 mm) minimum total thickness, single-sided, self-adhesive, with a strippable treated release paper. Surface to be non-skid surface, (textured, fabric scrim and/or sanded).
   1. Acceptable Products include:
      a. Boral TileSeal HT.
      b. InterWrap Titanium PSU.
      c. Protecto-Wrap Rainproof-40.
      d. Soprema Sopralene Stick.
      e. Tamko TW Metal and Tile.
      f. Architect approved (prior to bidding) equivalent product.

PART 3 EXECUTION

3.1 EXAMINATION

A. Verify existing site conditions under provisions of Division 01.

B. Verify that existing roof surface is clear and ready for work of this section.

3.2 PREPARATION

A. Sweep roof surface clean of loose matter. Remove loose refuse and dispose off site.

3.3 MATERIALS REMOVAL

A. Remove existing materials as indicated by the project documents.

B. Remove existing materials only to the extent necessary to provide a smooth and working surface for new construction and maintain the buildings in a weathertight condition.

3.4 TEMPORARY PROTECTION

A. Protect finished Work under provisions of Division 01.

B. Provide temporary protective sheeting over uncovered deck surfaces.

C. Turn sheeting up and over parapets and curbing. Retain sheeting in position with weights or temporary fasteners.

D. Provide for surface drainage from sheeting to existing drainage facilities.

E. Do not permit traffic over unprotected or repaired deck surface.

F. More permanent protection should be provided by the use of a self-adhesive underlayment and flashing membrane.

3.5 FIELD QUALITY CONTROL

A. Field inspection and testing will be performed under provisions of Division 1.

B. Inspection will identify the exact limits to material removal and necessity of drilling holes thru lightweight concrete.

END OF SECTION

PART 1 GENERAL

1.1 SECTION INCLUDES

A. Two-piece edge metal, counterflashing, and miscellaneous metal flashings used in conjunction with both the thermoplastic single-ply membrane and pre-finished metal panel roof systems.

1.2 RELATED SECTIONS

A. Section 07410 – Standing Seam Metal Roof Panels

B. Section 07530 – Thermoplastic Single Ply Membrane

C. Section 07900 - Joint Sealers.

1.3 REFERENCES

A. AISI American Iron and Steel Institute - Stainless Steel - Uses in Architecture.

B. ASTM A 167 - Stainless and Heat-Resisting Chromium-Nickel Steel Plate.

C. ASTM B209 - Aluminum and Alloy Sheet and Plate.

D. ASTM B 32 - Solder Metal.

E. ASTM B 486 - Paste Solder.

F. ASTM D 226 - Asphalt-Saturated Organic Felt Used in Roofing and Waterproofing.

G. ASTM D 4586 - Asphalt Roof Cement, Asbestos-Free.

H. FS O-F-506 - Flux, Soldering, Paste and Liquid.

I. NRCA National Roofing Contractors Association - Roofing Manual.

J. SMACNA - Architectural Sheet Metal Manual.

1.4 SUBMITTALS

A. Submit under provisions of Division 01 (Section 01330).

B. Submit Shop Drawing for any condition not shown on the plans or details.

C. Samples: Submit two samples, 12 x 12 inch in size illustrating typical splice joint, external and internal corners, junction at vertical dissimilar surface, material and finish.

D. Submit two samples (12x12 inches in size) of each type of metal specified.

1.5 QUALITY ASSURANCE

A. Perform work in accordance with SMACNA and standard details and requirements.

B. Failure to install the work in strict accordance with provisions of this Section is subject to total rejection of work specified herein.

C. Maintain one copy of each document on site.

1.6 MOCKUPS

A. Construct “in-place” sheet metal mock-ups demonstrating the following conditions as applicable and detailed in the project documents

1. Perimeter edge metal, splice and termination conditions.
2. Edge metal exterior and interior corner condition.
3. Typical interior wall flashing condition with metal counterflashing
4. Parapet coping conditions and splice, etc.
5. Roof expansion joint conditions.
6. Additional conditions as may be determined by the Architect.

B. Mock-ups are to be constructed and located where designated. Upon approval mock-ups may remain as part of the work.

1.7 QUALIFICATIONS

A. Fabricator and Installer: Company specializing in sheet metal flashing work with 5 years documented experience.

1.8 PRE-INSTALLATION CONFERENCE

A. Convene a minimum of one week prior to commencing work of this section, under provisions of Division 01.

B. Pre-Roofing Conference: Attendance at the pre-roofing conference by a qualified representative is required. Refer to the roofing sections.

1.9 DELIVERY, STORAGE AND HANDLING

A. Deliver to site, store, protect and handle products under provisions of Division 01.

B. Stack preformed material to prevent twisting, bending, or abrasion, and to provide ventilation. Slope metal sheets to ensure drainage.

C. Prevent contact with materials which may cause discoloration or staining.

1.10 COORDINATION

A. Coordinate work under provisions of this Section and Division 01.

B. Coordinate application of flashings with application of roofing, protruding material, and roof accessories to provide a complete weathertight installation according to the specified warranty requirements.

PART 2 PRODUCTS

2.1 SHEET MATERIALS

A. Stainless Steel (Transition Metal Pieces): ASTM A 167, Type 304, soft temper, 22 ga. or 24 ga. thickness unless otherwise specified; smooth 2D finish.

B. Zinc-Coated Steel: Commercial quality with 0.20% copper, ASTM A 525 except ASTM A 527 for lock-forming, G90 hot-dip galvanized, 16 gage for cleat/blocking and cants.

C. Aluminum: ASTM B 209, alloy 3003, temper H14, AA-C22A41 mill finish or prefinished as noted by details; thickness as noted by details and schedule within this section.

D. If any of above is noted to be prefinished, exposed surfaces shall be factory painted with a full strength fluoropolymer finish. Paint shall contain 75% KYNAR 500 resin and applied, (0.80 mil thickness), over manufacturer's primer, (0.20 mil thickness), with a total system thickness of 1.00 mil per ASTM D 1400. Gloss to be 20-30% per ASTM d 523 at 60 degrees.

2.2 ACCESSORIES

A. Fasteners: Stainless steel

B. Primer: Asphaltic based primer for flanges set in adhesive.

C. Protective Backing Paint: FS-TT-C-494, Cold-applied asphalt mastic, SSPC paint 12, compounded for 15 mil dry film thickness per coat

D. Sealant: specified in Section 07900.

E. Plastic Cement: ASTM D 4586, Type

F. Solder: ASTM B-32; 50/50 lead/tin type.

G. Flux: Acid - Chloride type.

H. Flux Cleaner: Washing Soda Solution - 5% to 10%.

I. Termination Bar: Aluminum ASTM B-209, Alloy 6061, Temper T-6, mill finish; sizes 1/8" thick by 1-1/2" with rounded edges

J. Flashing Tape (concealed application): Double sided, grey extruded or preformed, 99% solids, crosslinked polyisobutylene compound, non-sag, non-toxic, non-staining, permanently elastic self adhesive tape. 1/8" minimum thickness, 3/4" minimum width unless noted otherwise on the drawings.
   1. Pecora Corporation — Extru-Seal Glazing Tape
   2. Tremco Construction Products — 440 II Tape
   3. Equivalent products as approved by the Owner and Design Professional.

K. Modified Bitumen “Dry-in” Membrane material: 40 mil (1 mm) minimum total thickness, polyester reinforced, SBS modified asphalt waterproofing and underlayment membrane sheet , single-sided, self-adhesive, with a strippable treated release paper. Factory or field cut if necessary to the size required by the details.
   1. Approved Products:
      a. Boral — TileSeal HT.
      b. InterWrap — Titanium PSU.
      c. Protecto-Wrap — Rainproof-40.
      d. Soprema — Sopralene Stick.
      e. Tamko — TW Metal and Tile.
      f. Architect approved (prior to bidding) equivalent product

L. Sheet Metal Fasteners: Manufacturer's required fasteners.
   1. All fasteners are to be stainless steel, unless specifically detailed otherwise.
   2. Exposed fasteners are prohibited, and may only be used where specifically permitted by the project details or the Architect.
   3. Fasteners bearing on weather side of panels are to be a minimum #10 size “Scots” type screw with metal-backed neoprene washer integral with the head of the screw, or 3/16" diameter minimum stainless steel rivet.
   4. Use stainless steel fasteners for exterior application and galvanized or cadmium plated fasteners for interior applications. Use painted fasteners where fastening into painted panel or trim.
   5. Locate and space fastenings for true vertical and horizontal alignment. Use proper type fastening tools to obtain controlled uniform compression for positive seal without rupture of neoprene washer.
   6. See Roof Component Fastening Schedule within drawings for additional information.

M. Sheet Metal Adhesive for aluminum and pre-finished metal: Utilize a 2 component methacrylate adhesive system, approved products are:
   1. SciGrip SG300 series adhesive as manufactured by SCIGRIP Americas, 600 Ellis Road, Durham, NC 27703. Contact: (887) 477-4583, (www.scigrip.com).
   2. Weld-on SS300 series adhesive as manufactured by IPS Structural Adhesives, Inc., 600 Ellis Road, Durham, NC 27703. Contact: (887) 477-4583, (www.ipscorp.com).
   3. Partite 7300 or 7400 series adhesive as manufactured by Parson Adhesives, Inc., 3345 Auburn Road, Suite 107, Rochester Hills, MI 48309. Contact: (248) 299-5585, (www.parsonadhesives.com).
   4. The above products have been represented locally by North American Composites, 3715 North Frontage Road, Lakeland, FL 33810. Contact: (800) 241-5817. (www.nacomposites.com).
   5. Architect approved equal.

2.3 FABRICATION

A. Form sections true to shape, accurate in size, square, and free from distortion or defects.

B. Form pieces in longest possible lengths.

C. Hem exposed edges on underside 1/2”, miter and seam corners.

D. At all metal roofing termination and transition assemblies / flashing which are to be fabricated using pre-finished or PVC coated metal per the project details; utilize the specified sheet metal adhesive in lieu of soldering or welding, unless noted otherwise by the details.

E. Pretin edges of stainless steel sheet. Solder shop formed metal joints. After soldering, remove flux. Wipe and wash solder joints clean. Weather seal joints, (Heliarc shop formed aluminum joints).

F. Fabricate metal corners from one piece with 18 inch long face; solder/weld for rigidity. Solder joints of coated metal corners from the underside only using the least heat possible.

G. Fabricate corners from one piece with 18 inch long face; solder/weld for rigidity.

H. Form material with flat lock seams, except where otherwise indicated. At moving joints, use sealed lapped, bayonet-type or interlocking hooked seams.

I. Fabricate vertical faces with bottom edge formed outward 1 inch at 45 degrees and hemmed to form drip. Extend vertical face a minimum of 1-1/2” below any wood blocking to be protected.

2.4 FINISH

A. Prepare metal surfaces to be painted in accordance with Section 09900. All stainless steel flashings to remain unfinished, except as noted by details or when included as a fabrication within an otherwise prefinished trim component.

B. Back paint concealed metal surfaces with protective backing paint to a minimum dry film thickness of 15 mil.

C. Isolate dissimilar metals with accepted isolation paint or other accepted materials.

PART 3 EXECUTION

3.1 EXAMINATION

A. Verify roof openings, curbs, pipes, sleeves, ducts, or vents through roof are solidly set.

B. Verify roofing termination and base flashing are in place, sealed, and secure.

C. Do not proceed with work of this section until conditions detrimental to the proper and timely completion of the work have been corrected in an acceptable manner.

3.2 PREPARATION

A. Install starter and edge strips, and cleats before starting installation.

B. Install flashing true to lines and levels. Seal top of caulking with sealant.

3.3 INSTALLATION

A. Secure flashing in place using concealed fasteners. Use exposed fasteners only where permitted.

B. Fit flashing tight in place. Make corners square, surfaces true and straight in planes, and lines accurate to profiles.

C. Solder/weld metal joints for full metal surface contact. After soldering, wash metal clean with neutralizing solution and rinse with water.

D. Apply modified bitumen cement compound between metal flashing and bituminous underlayment and/or flashing membrane. At other locations utilize self-adhesive butyl flashing tape as specified above.

E. All straight joints in aluminum coping cap and fascia metal shall be formed with a minimum of cutting and assembled in a manner to allow overlap of materials and the underlying cleat for sealant contact.

F. Seal metal joints watertight.

3.4 FIELD QUALITY CONTROL

A. Field inspection will be performed under provisions of Division 01.

B. Inspection will involve surveillance of work during installation to ascertain compliance with specified requirements.

3.5 SCHEDULE

	Location	Metal Type	Thickness	Finish
A.	Edge Metal – Deck Flange	Coated Aluminum	0.040”	PVC
B.	Edge Metal – Fascia / Skirt	Stainless Steel	24 gage	Mill
C.	Edge Metal - Transition	Coated Aluminum	0.040”	PVC
D.	Drip Edge – Metal Roof	Aluminum	0.040”	Kynar
E.	Fascia Wrap – Metal Roof	Aluminum	0.040”	Kynar
F.	Transitions – Metal Roof	Aluminum	0.040”	Kynar
G.	Continuous Cleats	Stainless Steel	22 gage	Mill
H.	Counterflashing	Stainless Steel	24 gage	Mill
I.	Wind Cleats	Stainless Steel	26 gage	Mill
J.	Metal Panel “Z-Closure”	Aluminum	0.050”	Kynar
K.	Metal Roof Hip & Ridge Cap	Aluminum	0.040”	Kynar
L.	Weatherhead Fabrication	Stainless Steel	24 gage	Mill

Miscellaneous metal flashing and transitions: Membrane compatible PVC coated or Kynar pre-finished aluminum, 0.040” thickness or 24 gage stainless steel as required by the Architect.

END OF SECTION

PART 1 GENERAL

1.1 SECTION INCLUDES

A. Preparing substrate surfaces.

B. Sealant and joint backing.

1.2 RELATED SECTIONS

A. Section 07410 – Standing Seam Metal Wall Panels

B. Section 07530 – Thermoplastic Single Ply Membrane

C. Section 07620 – Sheet Metal Flashing and Trim

1.3 REFERENCES

A. ASTM C 920 - Elastomeric Joint Sealants.

B. ASTM C 1083 - Water Absorption of Cellular Elastomeric Gaskets and Sealants.

C. ASTM D 1622 - Standard Test Method Apparent Density of Rigid Cellular Plastic.

D. ASTM D 1623 - Standard Test Method for Apparent Tensile Adhesion Properties of Rigid Cellular Plastic.

E. ASTM E 96 - Standard Test for Water Vapor Permeance.

F. SWRI (Sealant, Waterproofing and Restoration Institute) - Sealant and Caulking Guide Specification.

1.4 SUBMITTALS

A. Submit under provisions of Division 01.

B. Product Data: Provide data indicating sealant chemical characteristics, performance criteria, substrate preparation, limitations, color availability.

C. Samples: Submit two color charts and tube samples.

D. Manufacturer's Installation Instructions: Indicate special procedures, surface preparation and perimeter conditions requiring special attention.

1.5 QUALITY ASSURANCE

A. Perform work in accordance with sealant manufacturer's requirements for preparation of surfaces and material installation instructions.

B. Maintain one copy of each document on site.

1.6 QUALIFICATIONS

A. Manufacturer: Company specializing in manufacturing the Products specified in this section with minimum five years documented experience.

B. Applicator: Company specializing in performing the work of this section with minimum 3 years documented experience approved by manufacturer.

1.7 ENVIRONMENTAL REQUIREMENTS

A. Maintain temperature and humidity recommended by the sealant manufacturer during and after installation.

B. Existing Conditions

1. Verify existing conditions, such as soundness of perimeter conditions, and varying deck and wall thickness for length of anchoring services required and other visible conditions prior to Bidding.
2. Report conflicts and problems to the Architect for resolution prior to Bidding. Failure to report these conflicts and problems places the responsibility on the Contractor to complete the work in accordance with the Documents at no additional cost to the Owner.
3. Replace or restore to original condition any materials or work damaged during construction.
4. Surfaces not designated to receive the system shall be properly masked or otherwise protected against accidental spillage or application of the material to those areas.
5. Failure to install the work in strict accordance with provisions of this Section is subject to total rejection of work specified herein.

1.8 COORDINATION

A. Coordinate work under provisions of Division 01.

B. Coordinate the work with all Sections.

1.9 WARRANTY

A. Provide five year warranty under provisions of Division 01.

B. Warranty: Include coverage for installed sealants and accessories which fail to achieve watertight seal and exhibit loss of adhesion or cohesion, or do not cure.

PART 2 PRODUCTS

2.1 SEALANTS

A. Silicone Sealant (Type S): ASTM C920, Grade NS, Class 25, Use single component, moisture curing, non-staining, non-bleeding, capable of continuous water immersion, non-sagging type; color as selected match adjacent finish materials.

. Approved Manufacturer's: Product

1. Dow Corning 795
2. GE Silpruf
3. Pecora Corporation 860 / 863 / 864
4. Tremco Spectrem II
5. Architect approved equal.

B. Polyurethane Sealant (Type S): ASTM C920, Grade NS, Class 25, Use single component, moisture curing, non-staining, non-bleeding, capable of continuous water immersion, non- sagging type; color as selected.

Approved Manufacturer's: Product

1. Sika 1A
2. Sonneborn NP-1
3. Architect approved equal.

C. Silyl-terminated Polyether (Ethicone) Sealant (Type S): ASTM C 920, Grade NS, Class 50. Use single component, chemical curing, solvent free, non-staining, non-non bleeding, capable of water immersion, non-sagging type; color as selected.

Approved Manufacturer's: Product

1. BASF / Sonneborn NP-150
2. Carlisle Syntec Universal Single-Ply Sealant
3. ChemLink M-1
4. Architect approved equal.

2.2 ACCESSORIES

A. Primer: Recommended by sealant manufacturer to suit application.

B. Joint Cleaner: Non-corrosive and non-staining type, recommended by sealant manufacturer; compatible with joint forming materials.

C. Backer Rod: Extruded polyolefin foam made of a non-absorbing outer skin and a highly resilient interior network of open and closed cells which will not out-gas when ruptured.

D. Bond Breaker: Pressure sensitive tape recommended by sealant manufacturer to suit application.

PART 3 EXECUTION

3.1 EXAMINATION

A. Verify that substrate surfaces and joint openings are ready to receive work.

3.2 PREPARATION

A. Remove loose materials and foreign matter which might impair adhesion of sealant.

B. Clean and prime (if applicable) joints in accordance with manufacturer's instructions.

C. Perform preparation in accordance with manufacturer's instructions.

D. Protect elements surrounding the work of this section from damage or disfiguration.

3.3 INSTALLATION

A. Install sealant in accordance with ASTM C 1193 and the manufacturer's instructions.

B. Measure joint width and size material to achieve 2:1 width/depth ratios.
1. Width/depth ratio of 2: 1.
2. Neck dimension no greater than 1/2 of joint width.
3. Surface bond area on each side not less than 75 percent of joint width.

C. Install bond breaker where joint backing is not used.

D. Install sealant free of air pockets, foreign embedded matter, ridges, and sags.

E. Apply sealant within recommended application temperature ranges. Consult manufacturer when sealant cannot be applied within these temperature ranges.

F. Tool joints concave, channel shaped, as detailed.

3.4 CLEANING

A. Clean work under provisions of Division 01.

B. Clean adjacent soiled surfaces.

3.5 PROTECTION OF FINISHED WORK

A. Protect finished installation under provisions of Division 01.

B. Protect sealants until cured.

3.6 SCHEDULE

A.	Metal to Metal (to be exposed)	Silicone / Polyether	Color to match metal
B.	Metal to Metal (to be painted)	Polyether / Urethane	Color to match metal
C.	Metal to CMU / Stucco	Polyether / Urethane	Color to match metal
D.	CMU / Stucco joints	Polyether / Urethane	Color to match paint.
E.	Roof Membrane to CMU	Polyether / Urethane	Color to match membrane
F.	Metal to Bitumen Materials	Polyether	Color to match metal
G.	CMU to Bitumen Materials	Polyether	Color to match CMU finish
H.	Single-ply Membrane to CMU	Polyether / Urethane	Color to match Membrane

END OF SECTION

PART 1 GENERAL

1.1 SUMMARY

A. Section Includes:
1. Domed plastic unit skylights for curb mounting.

B. Related Sections:
1. Section 06100 – Rough Carpentry
2. Section 07530 – Single-Ply Membrane Roofing
3. Section 07620 – Sheet Metal Flashing and Trim
4. Section 07900 – Joint Protection

1.2 REFERENCES

A. AA (Aluminum Association)
1. AA - M12C22A41- Anodized Plus Finish
2. AA - M12C22A32/A34 - Aluminum Association (AA) - Color anodized: Class II, Color Anodic Finish

B. AAMA (American Architectural Manufacturer's Association)
1. AAMA - 501.2 - Quality Assurance and Diagnostic Water Leakage Field Check of Installed Storefronts, Curtain Walls, and Sloped Glazing Systems.
2. AAMA - 605.2 - Voluntary Specification for High Performance Organic Coatings.
3. AAMA - 607.1 - Voluntary Guide Specifications and Inspection Methods for Clear Anodic Finishes for Architectural Aluminum.
4. AAMA - 612 - Voluntary Specifications and Performance Requirements and Test Procedures for Combined Coatings of Anodic Oxide and Transparent Coatings on Architectural Aluminum, for Finishes such as Anodized Plus.

C. ASTM
1. ASTM – B 209 - American Society for Testing and Materials (ASTM) - Standard Specification for Aluminum and Aluminum-Alloy Sheet and Plate.
2. ASTM – C 1048 - American Society for Testing and Materials (ASTM) - Standard Specification for Heat-Treated Flat Glass Kind HS, Kind FT Coated and Uncoated Glass.
3. ASTM – E 331 - American Society for Testing and Materials (ASTM) - Standard Test Method for Water Penetration of Exterior Windows, Curtain Walls, and Doors by Uniform Static Air Pressure Difference.
4. ASTM – E 773 - American Society for Testing and Materials (ASTM) - Standard Test Method for Accelerated Weathering of Sealed Insulating Glass Units.
5. ASTM – E 774American Society for Testing and Materials (ASTM) - Standard Specification for the Classification of the Durability of Sealed Insulating Glass Units.

1.3 SUBMITTALS

A. Submit under provisions of Division 01.

B. Product Data: Manufacturer's data sheets on each product to be used, including:
1. Preparation instructions and recommendations.
2. Storage and handling requirements and recommendations.
3. Indicate materials, finishes and installation procedures recommended by manufacturer.
4. Indicate compliance with specified design criteria.
5. Indicate compliance with performance requirements.
6. Include product specific glazing details.
7. Florida Product Approvals or Miami-Dade Notice of Acceptance.

C. Shop Drawings:
1. Indicate material types, gauges and finishes, fabrication details and installation details.
2. Show glazing types, methods of attachment and thermal movement provisions.

D. Indicate compliance with specified structural design criteria.
1. Submitted design calculations shall bear seal of a professional engineer licensed in the State of Florida.
2. Certify that an engineer has reviewed the shop drawings.

E. Selection Samples: For each finish product specified, two complete sets of color chips representing manufacturer's full range of available colors and patterns.

F. Verification Samples: For each finish product specified, two samples, minimum size 6 inches square, representing actual product, color, and patterns.

G. Manufacturer's Field Reports: Are not required, except as required by the manufacturer for warranty purposes.

1.4 QUALITY ASSURANCE

A. Manufacturer Qualifications:
1. Skylight manufacturer shall have a minimum of ten years of experience in design, fabrication and installation of custom aluminum skylight systems.

B. Installer Qualifications:
1. Installer shall be trained and approved by manufacturer.
2. Installer shall have five years of experience with skylight type, size and complexity.

C. Mock-Up: Provide a mock-up for evaluation of quality of assembly, internal drainage and anchorage methods to curb in field to be evaluated and approved by Architect.

1.5 DELIVERY, STORAGE AND HANDLING

A. Store products in manufacturer's unopened packaging until ready for installation.

B. Store and dispose of solvent-based materials, and materials used with solvent-based materials, in accordance with requirements of local authorities having jurisdiction.

1.6 PROJECT CONDITIONS

A. Maintain environmental conditions (temperature, humidity, and ventilation) within limits recommended by manufacturer for optimum results. Do not install products under environmental conditions outside manufacturer's absolute limits.

1.7 WARRANTY

A. Performance Warranty: Provide manufacturer's five (5) year written warranty covering skylight work. Warranty shall cover defective materials, workmanship and performance. Warranty shall be limited to repair or replacement of work described in this section and shall not provide for repair or replacement of work by others.

PART 2 PRODUCTS

2.1 MANUFACTURERS

A. Acceptable Manufacturer: (Basis of Design) American Skylites, Inc., which is located at: 525 113th St.; Arlington, TX 76011; Toll Free Tel: 800-772-7401; Tel: 817-633-4666; www.americanskylites.com

B. Requests for substitutions of equivalent products will be considered by the Architect and Owner in accordance with provisions of Section 01600.

2.2 SKYLIGHT PERFORMANCE

A. Load:
1. Deflection of framing members shall not exceed L/180 or 1 inch (25 mm) whichever is less.
2. Acrylic and/or polycarbonate unit skylights shall meet the requirements of uniform load test ASTM E 330 that requires glazing to withstand a positive and negative test pressure of 60 psf.

B. Air Infiltration:
1. Acrylic and/or polycarbonate unit skylights shall meet the requirements of ASTM E 283 that allows a maximum air infiltration of 0.06 cfm (.0017 cu. m/m) of the total glazed surface area.

C. Water Infiltration:
1. Acrylic and/or polycarbonate unit skylights shall meet the requirements of ASTM E 547 / E 331 that allows for no water infiltration at a test pressure of 12 psf (571 Pa).

2.3 PLASTIC SKYLIGHT

A. Curb Mount: Double domed polycarbonate non-thermally broken curb mount skylight units to be mounted to a locally fabricated stainless steel curb assembly.
1. Nominal Size: Field verify exact dimensions required
2. Glazing Material:
a. Outer Dome: Polycarbonate
b. Inner Dome: Polycarbonate
3. Glazing Color::
a. Outer Dome: Diffused white
b. Inner Dome: Clear
4. Frame Finish: Clear anodized aluminum

2.4 FABRICATION

A. Unit Frame: Extruded aluminum reinforced and welded corner joints, integral curb from mounting flange to receive roof flashing system, with integral condensation gutter and dome retainer. Condensation drainage shall be to the exterior.

B. Glazing Gaskets and Sealants: Glazing to be separated from frame by a continuous extruded black neoprene gasket.

C. Fasteners: Screws and fasteners used in the factory assembly process shall be stainless steel. Fasteners and screws used for securing skylight to structure shall be stainless steel.

PART 3 EXECUTION

3.1 EXAMINATION

A. Do not begin installation until substrates have been properly prepared.
1. Prior to any work of this section, carefully inspect the installed work of all other trades and verify that all such work is complete to the point where this installation may properly commence.
2. Verify that flashing and sheet metal may be installed in accordance with the original design, approved mock-ups and standards.

B. Immediately notify the Architect of any defects. Do not install metal work until defects have been corrected.

3.2 PREPARATION

A. Clean surfaces thoroughly prior to installation.

B. Prepare surfaces using the methods recommended by the manufacturer for achieving the best result for the substrate under the project conditions.

C. Metal Protection (Aluminum):
1. Where aluminum will contact dissimilar metals, protect against galvanic action by painting contact surfaces with primer or by applying sealant or tape recommended by manufacturer for this purpose.
2. Where aluminum will contact concrete or masonry, protect against corrosion by painting contact surfaces with bituminous paint.
3. Where aluminum will contact pressure-treated wood, separate dissimilar materials by methods recommended by manufacturer.

3.3 INSTALLATION

A. General: Comply with manufacturer's written instructions for protecting, handling, and installing skylight components.

B. Coordinate with installation of roof deck and other substrates to receive skylight units.

C. Coordinate with installation of vapor barriers, roof insulation, roofing, and flashing as required to assure that each element of the work performs properly and that combined elements are waterproof and weathertight. Anchor units securely to supporting structural substrates, adequate to withstand lateral and thermal stresses as well as inward and outward loading pressures.

3.4 CLEANING

A. Remove protective material form prefinished aluminum surfaces.

B. Wash down exposed surfaces; wipe surfaces clean.

C. Remove excess sealant.

3.5 PROTECTION

A. Protect installed products until completion of project.

B. Touch-up, repair or replace damaged products before Substantial Completion.

END OF SECTION

PART 1 GENERAL

1.1 SECTION INCLUDES

A. Basic Mechanical Requirements specifically applicable to Division 15 Sections, in addition to Division 01 - General Requirements.

1.2 DESCRIPTION OF WORK

A. The extent and location of work is described by provisions of this section and includes the following:
   1. Removal and reinstallation of roof top equipment.
   2. Removal of all cables, conduits, pipes, fixtures, and such items related to this trade as governed and required by the specified roof installation; raising of curbs and supports; reinstallation and re-connection of all said equipment.

1.3 WORK SEQUENCE

A. Install work in stages to accommodate Owner's occupancy requirements during the construction period coordinate mechanical schedule and operations with Owner and Architect:

1.4 SUBMITTALS

A. Submit under provisions of Division 01.

B. Submit shop drawings and product data grouped to include complete submittals of related systems, products, and accessories in a single submittal.

C. Mark dimensions and values in units to match those specified.

1.5 REGULATORY REQUIREMENTS

A. Conform to applicable Building Code.

1.6 PROJECT/SITE CONDITIONS

A. Existing Conditions:
   1. This project involves mechanical work on existing building(s). Verify existing conditions and other visible conditions prior to bidding.
   2. Report conflicts and problems to the Architect prior to bidding for resolution. Failure to report these conflicts and problems places the responsibility on the Prime Contractor to complete the work in accordance with the Documents at no additional cost to the Owner.
   3. Failure to install the work in strict accordance with provisions of this Section is subject to total rejection of work specified herein.

4. Failure to install the work in strict accordance with provisions of this Section is subject to total rejection of work specified herein.

B. Utility Services:
1. Do not interrupt existing utilities serving occupied or used facilities, except when authorized in writing by Owner and authorities having jurisdiction.
2. Provide temporary services during interruptions to existing utilities, as acceptable to governing authorities.

C. Install Work in locations shown on Drawings, unless prevented by Project conditions.

1.7 SEQUENCING AND SCHEDULING

A. Construct Work in sequence under provisions of Division 01.

PART 2 PRODUCTS (Not Used)

PART 3 EXECUTION

3.1 ROOF-TOP EQUIPMENT PROCEDURE

A. Operate mechanical equipment in the presence of representatives of the Contractor and representatives of the Owner prior to any demolition, or prior to disconnecting any mechanical equipment or wiring in order to establish that all these systems are in proper working order at the start of the project. This would establish the degree of responsibility that this Contractor will have when he is required to place these mechanical/electrical systems back in working order at the end of the project.

B. Removal:
1. Prior to disconnection of any mechanical equipment, prepare a performance log (attached at end of this Section) for each item of equipment. Submit log sheet with any comments as to existing problems to the Architect or Architect's representative.
2. Temporarily remove existing roof top equipment as required to perform work. Use all means necessary to protect equipment during removal.
3. Store equipment in a secure place for reinstallation.

C. Reinstallation:
1. Reinstall mechanical equipment in accordance with the manufacturer's instructions.
2. Reconnect electrical and control wiring to equipment and comply with equipment manufacturer's instructions.

3. Reinstallation and reconnection of equipment shall comply with governing mechanical codes.
4. Start up equipment after reinstallation. Prepare performance log for each unit at start-up and submit to the Architect.

D. Coordination with Roofing:
1. Cables, conduits, pipes, fixtures, and such related items shall not be in direct contact with roof membrane, roofing sheet metal, and related roofing accessory items, except as shown on drawings and as specified.

END OF SECTION

PERFORMANCE LOG DATA SHEET: EXHAUST FAN

Date:_____ Time: _____

Project: _____

Prime Contractor: _____

Mechanical Subcontractor: _____

Exhaust Fan:_____

Equipment Manufacturer: _____

Model Number: _____

Serial Number: _____

Location: _____

Rated Voltage: _____

Fan Motor Amperage Actual:_____

Fan R.P.M.: _____

General Description of physical appearance of the unit and associated duct work:

_____

_____

_____

_____

_____

_____

_____

_____

_____

PERFORMANCE LOG DATA SHEET: AIR CONDITIONING EQUIPMENT

Date: _____ Time: _____

Project: _____

Prime Contractor: _____

Mechanical Subcontractor: _____

Air Conditioning Equipment:_____

Equipment Manufacturer: _____

Model Number: _____

Serial Number: _____

Location: _____

Description of Control System: _____

Operating Voltage: _____

Fan Amperage: Rated _____ Actual: _____

For R.P.M.

Compressor Amperage: Rated: _____ Actual: _____

Evaporator Motor Amperage: Rated: _____Actual: _____

Pressure: Suction:_____ Oil:_____ Discharge:_____

Evap. Air Temp. F: Entering:_____ Leaving:_____

Coil Condition - Evaporation: _____

Coil Condition - Condenser: _____

General description of physical appearance units: _____

_____

_____

PART 1 GENERAL

1.1 SECTION INCLUDES

A. Retrofit roof drains.

1.2 RELATED SECTIONS

A. Section 07530 – Thermoplastic Single Ply Membrane

1.3 REFERENCES

A. ANSI / ASME A112.21.2 - Roof Drains.

1.4 SUBMITTALS

A. Submit under provisions of Division 01.

B. Product Data: Provide component sizes, rough-in requirements, service sizes, and finishes.

C. Manufacturer's Installation Instructions: Indicate assembly and support requirements.

1.5 PROJECT RECORD DOCUMENTS

A. Submit under provisions of Division 01.

1.6 OPERATION AND MAINTENANCE DATA

A. Submit under provisions of Division 01.

1.7 DELIVERY, STORAGE, AND HANDLING

A. Deliver to site, store, protect and handle products under provisions of Section 01600.

B. Accept specialties on site in original factory packaging. Inspect for damage.

1.8 PROJECT/SITE CONDITIONS

A. Existing Conditions
1. Verify existing conditions, such as soundness of perimeter conditions, and varying deck and wall thickness for length of anchoring services required and other visible conditions prior to Bidding.

2. Report conflicts and problems to the Architect for resolution prior to Bidding. Failure to report these conflicts and problems places the responsibility on the Contractor to complete the work in accordance with the Documents at no additional cost to the Owner.

PART 2 PRODUCTS

2.1 ROOF DRAINS

A. Basis of design is the Heavy Duty PVC Coated AlumaWeld RetroDrain as manufactured by OMG Roofing Products with the following features:
1. One-piece 1/8” thick spun aluminum body.
2. 17.5” diameter deck flange with plastisol coating.
3. Expanding gasket seal for watertight connection.
4. Heavy duty cast aluminum strainer dome.
5. On this project, all roof drains are 6” diameter.

B. Other Approved Manufacturers by Substitution Only:

PART 3 EXECUTION

3.1 PREPARATION

A. Coordinate cutting and forming of roof construction to receive drains.

3.2 INSTALLATION

A. Install in accordance with the manufacturer’s recommendations and the project details.

B. Securely anchor deck flange to the underlying structure per he project details.

END OF SECTION

PART 1 GENERAL

1.1 SECTION INCLUDES

A. Basic Electrical Requirements specifically applicable to Division 16 Sections, in addition to Division 01 - General Requirements.

1.2 SCOPE OF WORK

A. Electrical Contract work includes:
1. Disconnection and reconnection of roof top equipment.
2. Removal of all abandoned cables, conduits, pipes, fixtures, and such items related to this trade as governed and required by the specified roof installation; raising of curbs and supports.
3. Extension of branch circuit and equipment connections due to raising of curbs and supports.
4. Reinstallation and reconnection of all said equipment to be retained.
5. Relocation of roof top cables and conduit to below deck.

1.3 WORK SEQUENCE

A. Install work in to accommodate Owner's occupancy requirements during the construction period. Coordinate electrical schedule and operations with Owner and Architect/Engineer and other Trades.

1.4 REFERENCES

A. ANSI / NFPA 70 - National Electrical Code, current edition.

1.5 SUBMITTALS

A. Submit under provisions of Division 01.

B. Electrical work to be done by a licensed electrical contractor. The electrical supervisor shall be present while work is being performed.

C. Submit shop drawings and product data grouped to included complete submittals of related systems, products and accessories in a single submittal.

D. Mark dimensions and values in units to match those specified.

1.6 REGULATORY REQUIREMENTS

A. Electrical: Conform to NFPA 70, National Electrical Code, (N.E.C.), - current edition.

B. Life Safety: NFPA 101 Life Safety Code, current edition.

C. Electrical work to be done by a licensed electrical contractor. The electrical supervisor shall be present while work is being performed.

D. Install all work in accordance with the latest edition of all applicable regulations and governing codes, including the Florida State Requirements for Educational Facilities (SREF) and the current edition of the Florida Building Code (FBC), Section 423.

1.7 PROJECT CONDITIONS

A. Existing Conditions
1. Verify existing conditions, such as soundness of perimeter conditions, and varying deck and wall thickness for length of anchoring surfaces required and other visible conditions prior to bidding. Nailer height indicated on the details may vary from actual requirement; coordinate nailer height prior to bidding.
2. Report conflicts or problems to the Architect for resolution prior to Bidding. Failure to report these conflicts and problems places the responsibility on the Contractor to complete the work in accordance with the Documents at no additional cost to the Owner.
3. Replace or restore to original condition any materials or work damaged during construction.

B. Install Work in locations shown on Drawings, unless prevented by Project conditions.

C. All dimensions indicated on the drawings are based on project record drawings and field measurements. Make necessary reasonable adjustments to quantities in field in order to provide a complete project.

D. Prepare drawings showing proposed rearrangement of Work to meet Project conditions, including changes to Work specified in other Sections. Obtain permission of Owner and Architect/Engineer before proceeding.

1.8 SEQUENCING AND SCHEDULING

A. Construct Work in sequence under provisions of Division 01.

B. Coordinate all work with Roofing Contract.

C. Notify Owner, in writing, at least 48 hours in advance of any service interruptions.

PART 2 PRODUCTS

2.1 GENERAL REQUIREMENTS THAT WORK BE COMPLETE

A. Provide same products or type of construction as that in existing equipment.
1. Generally, Contract Documents do not define products or standards of workmanship present in existing installation. The Contractor shall determine products by inspection/testing and workmanship by use of the existing as a sample for comparison.

B. Presence of a product, finish, or type of equipment requires that reinstallation shall be performed as necessary to make work complete and consistent with identical standards of quality of existing product.

2.2 Anchors and Fasteners: Use anchors and fasteners of a type designed and intended for use in the base material to which the material or support is to be attached and capable of supporting the intended load and withstanding any associated stresses and vibrations. Do not use wooden plugs for fastening.

PART 3 EXECUTION

3.1 INSPECTION AND PREPARATION

A. Inspection
1. Examine conditions under which electrical work is to be performed and notify Prime Contractor and Architect in writing of unsatisfactory conditions.
2. Do not proceed with electrical work until unsatisfactory conditions have been corrected.
3. All electrical equipment and systems should be operated in the presence of representatives of the Contractor and representatives of the Owner prior to any demolition, or prior to disconnecting any electrical wiring in order to establish that all these systems are in proper working order at the start of the project.

This will establish the degree of responsibility that this Contractor will have when he is required to place these electrical systems back in working order at the end of the project.

B. Disconnection
1. List and disconnect existing roof top conduits as shown on the drawings.
a. Prior to disconnection of any electrical system, prepare a checklist of existing system conditions.
b. Submit the checklist with any comments to the Architect.

3.2 INSTALLATION

A. General
1. Use good workmanship in the installation of all electrical materials and equipment.
2. Install equipment level, plumb and true with the structure and other equipment.
3. Firmly secure all materials in place.
4. Materials embedded in concrete or masonry or otherwise part of the structure are considered sufficiently supported.
5. Use hardware and accessory fittings of a type designed, intended and appropriate for the use and complement the items with which they are used.

B. Wiring Methods
1. Install all wiring in conduit or approved raceways unless otherwise indicated.
2. Firmly and securely fasten conduits to or support from the building or structural member. Use changes and supports that are standard catalog items of a type compatible with the suitable for the intended use. Twisted wire hangers and supports are not acceptable.
3. Do not pull conductors into conduits until all work which may cause damage to the wires is completed. Install wire and cables so as not to damage the insulation or cable sheath. Pull all conductors to be installed in a raceway together.
4. Keep conductor splices to a minimum. Provide splices and taps with at least the equivalent mechanical strength and insulation as the conductors. Provide splice and tap devices of the proper size and type for the use and compatible with the conductor material.

C. Reconnection: Reconnect electrical systems as specified above, and test for proper operation.
1. Reinstallation and reconnection of equipment and systems shall comply with governing electrical codes.
2. Prepare a checklist of system conditions after reconnections.
3. Submit the checklist with any comments to the Architect.

D. Electrical conduits, pipes, wires, cables, fixtures, and such related items shall not be in contact with roof membrane, roofing sheet metal, and related roofing accessory items, except as shown on drawings and as specified.

END OF SECTION

ROOF REPLACEMENT AT:

FIRST COAST TECHNICAL COLLEGE BUILDINGS "B"

2980 COLLINS AVE.
ST. AUGUSTINE, FL 32084

SJCSD BID NO. 2020-35

SCHOOL BOARD MEMBERS

Superintendent:	**Tim Forson**
Chair – District 1	**Beverly Slough**
District 2	**Thomas L. Allen, Jr.**
District 3	**Bill Mignon**
District 4	**Kelly Barrera**
Vice Chair – District 5	**Patrick Canan**

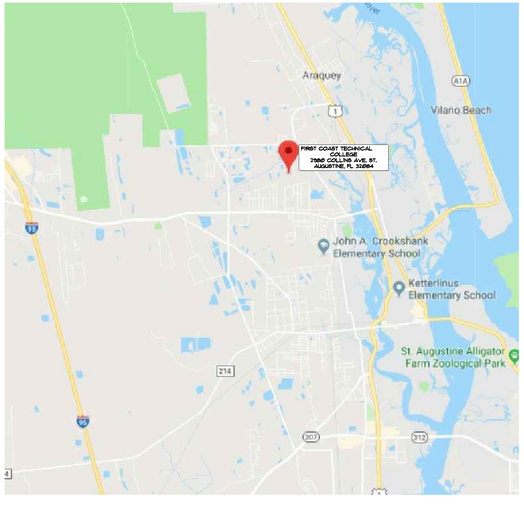

SITE VICINITY MAP

DRAWING INDEX

SHEET NUMBER	SHEET TITLE
CS	COVER SHEET, VICINITY MAP AND DRAWING INDEX
A01	ROOF PLAN DIMENSIONS AND BUILDING CODE DATA
A02	ROOF PLAN AND SPECIFIC NOTES
B01	GENERAL NOTES, FASTENING SCHEDULE AND ABBREVIATIONS
B02	ROOF EDGE DETAILS AND FABRICATIONS
B03	ROOF EDGE DETAILS AND FABRICATIONS
B04	ROOF EDGE DETAILS AND FABRICATIONS
B05	ROOF PENETRATION DETAILS
B06	MECHANICAL EQUIPMENT DETAILS
B07	ROOF DRAINAGE DETAILS
B08	ROOF PENETRATION FLASHING DETAILS
B09	ROOF PENETRATION FLASHING AND MISC. DETAILS
B10	ROOF DRAINAGE AND MISCELLANEOUS DETAILS

A/R/C Associates Incorporated
Architecture
Roof Consulting
Construction Technology
LIC. NBR AAC000932
601 North Fern Creek Avenue
Suite 100 Orlando, FL
32803-4899
Tel. (407) 896-7875
Fax. (407) 896-6043

COPYRIGHT © 2020 A/R/C ASSOCIATES, INC.

--/--/--

JAMES W. RIPLEY AR-12758

REVISIONS

NO.	DATE	BY:

COVER SHEET, VICINITY MAP AND DRAWING INDEX

SJCSB PROJECT NO: 2020-35

ROOF REPLACEMENT AT:
FIRST COAST TECHNICAL COLLEGE - BUILDINGS "B"
2980 COLLINS AVE. ST. AUGUSTINE, FL 32084
ST. JOHNS COUNTY SCHOOL DISTRICT

JOB NO.: 20021.00
DRAWN BY: JPP
CHECKED BY JWR
DATE 11/06/20
SCALE: 1=1
PLOT SCALE: AS NOTED

CS

SHEET NO.:
19072.00

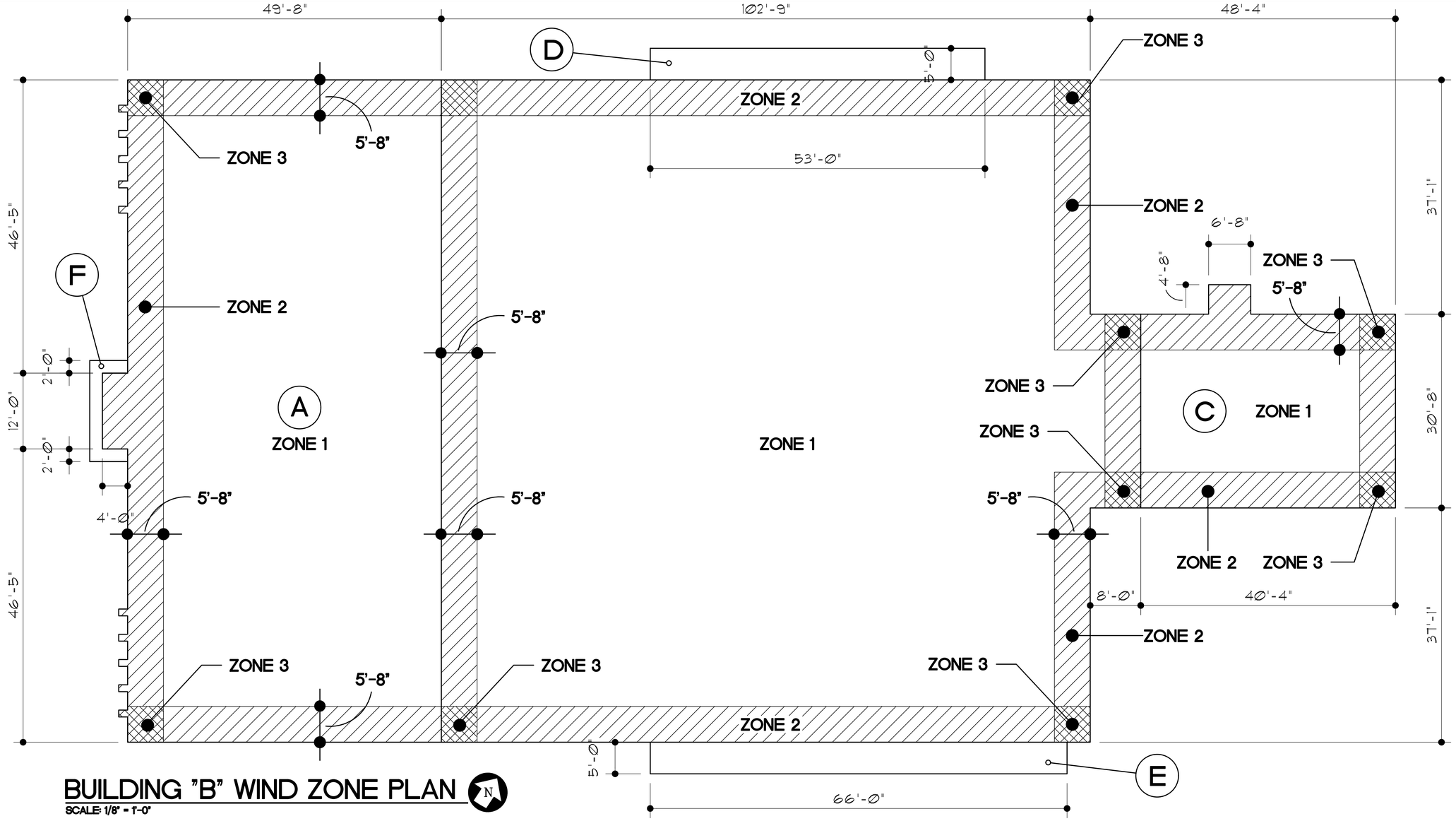

BUILDING "B" WIND ZONE PLAN

SCALE: 1/8" = 1'-0"

FLORIDA BLDG CODE DATA

(FBC - 6TH EDITION 2017 EDITION / ASCE 7-10)

ROOF AREA "F" ONLY

Risk Category	III	
Wind Spe - Ultimate	141	MPH
- Nominal (Actual)	109	MPH
Building Enclosure	PE	
Building Exposure	c	
Internal Pressure Coefficient	0.55	
Mean Roof Height	12.00	
Edge / Corner Zone Width	3.0	FT

Ultimate (Factored) Wind Design Pressures

Zone 1 (Field)	53	/	-57	PSF
Zone 2 (Edge)	53	/	-64	PSF
Zone 3 (Corner)	53	/	-64	PSF
Zone 4 (Wall)	57	/	-61	PSF
Zone 5 (Corner)	57	/	-72	PSF

Actual (Unfactored) Wind Design Pressures

Zone 1 (Field)	32	/	-34	PSF
Zone 2 (Edge)	32	/	-39	PSF
Zone 3 (Corner)	32	/	-39	PSF
Zone 4 (Wall)	34	/	-36	PSF
Zone 5 (Corner)	34	/	-43	PSF

FLORIDA BLDG CODE DATA

(FBC - 6TH EDITION 2017 EDITION / ASCE 7-10)

ALL LOW SLOPE ROOF AREAS

Risk Category	III	
Wind Spe - Ultimate	141	MPH
- Nominal (Actual)	109	MPH
Building Enclosure	PE	
Building Exposure	c	
Internal Pressure Coefficient	0.55	
Mean Roof Height	14.00	
Edge / Corner Zone Width	5.6	FT

Ultimate (Factored) Wind Design Pressures

Zone 1 (Field)	31	/	-57	PSF
Zone 2 (Edge)	31	/	-86	PSF
Zone 3 (Corner)	31	/	-123	PSF
Zone 4 (Wall)	53	/	-59	PSF
Zone 5 (Corner)	53	/	-70	PSF

Actual (Unfactored) Wind Design Pressures

Zone 1 (Field)	19	/	-34	PSF
Zone 2 (Edge)	19	/	-52	PSF
Zone 3 (Corner)	19	/	-74	PSF
Zone 4 (Wall)	32	/	-35	PSF
Zone 5 (Corner)	32	/	-42	PSF

BUILDING CODE NOTES:

1. Based on the available information and field investigation of the existing structure, to the best of my knowledge, the construction shown by these drawings has been designed to meet or exceed the wind load requirements of section 1609 of the Florida Building Code, 6th edition (2017) as defined above.
2. The edge securement for low-slope membrane roof systems metal edge securement are designed in accordance with test protocols for high-velocity hurricane zone Roofing Application Standard (RAS) No. 111 - Standard Requirements for Attachment of Perimeter Wood Blocking and Metal Flashing as contained in the Florida Building Code, 6th edition (2017). This standard defines the prescriptive measures for attachment of perimeter wood blocking and metal flashing to comply with the requirements of the Florida Building Code in all areas of the state, including Dade County.
3. The existing structure, as designed, is adequate to support the loads imposed upon it by the new roof flashing system as proposed in these documents.

A/R/C Associates Incorporated

Architecture
Roof Consulting
Construction Technology
LIC. NBR AAC000932
601 North Fern Creek Avenue
Suite 100 Orlando, FL
32803-4899
Tel. (407) 896-7875
Fax. (407) 898-6043

COPYRIGHT © 2020 A/R/C ASSOCIATES, INC.

--/--/--

JAMES W. RIPLEY AR-12758

REVISIONS		
NO.	DATE	BY:

ROOF PLAN DIMENSIONS AND BUILDING CODE DATA

SJCSB PROJECT NO: 2020-35

ROOF REPLACEMENT AT:

FIRST COAST TECHNICAL COLLEGE - BUILDINGS "B"
2980 COLLINS AVE. ST. AUGUSTINE, FL 32084
ST. JOHNS COUNTY SCHOOL DISTRICT

JOB NO.:	20021.00
DRAWN BY:	JPP
CHECKED BY	JWR
DATE	11/06/20
SCALE:	1=1
PLOT SCALE:	AS NOTED

SHEET NO.: A01

19072.00

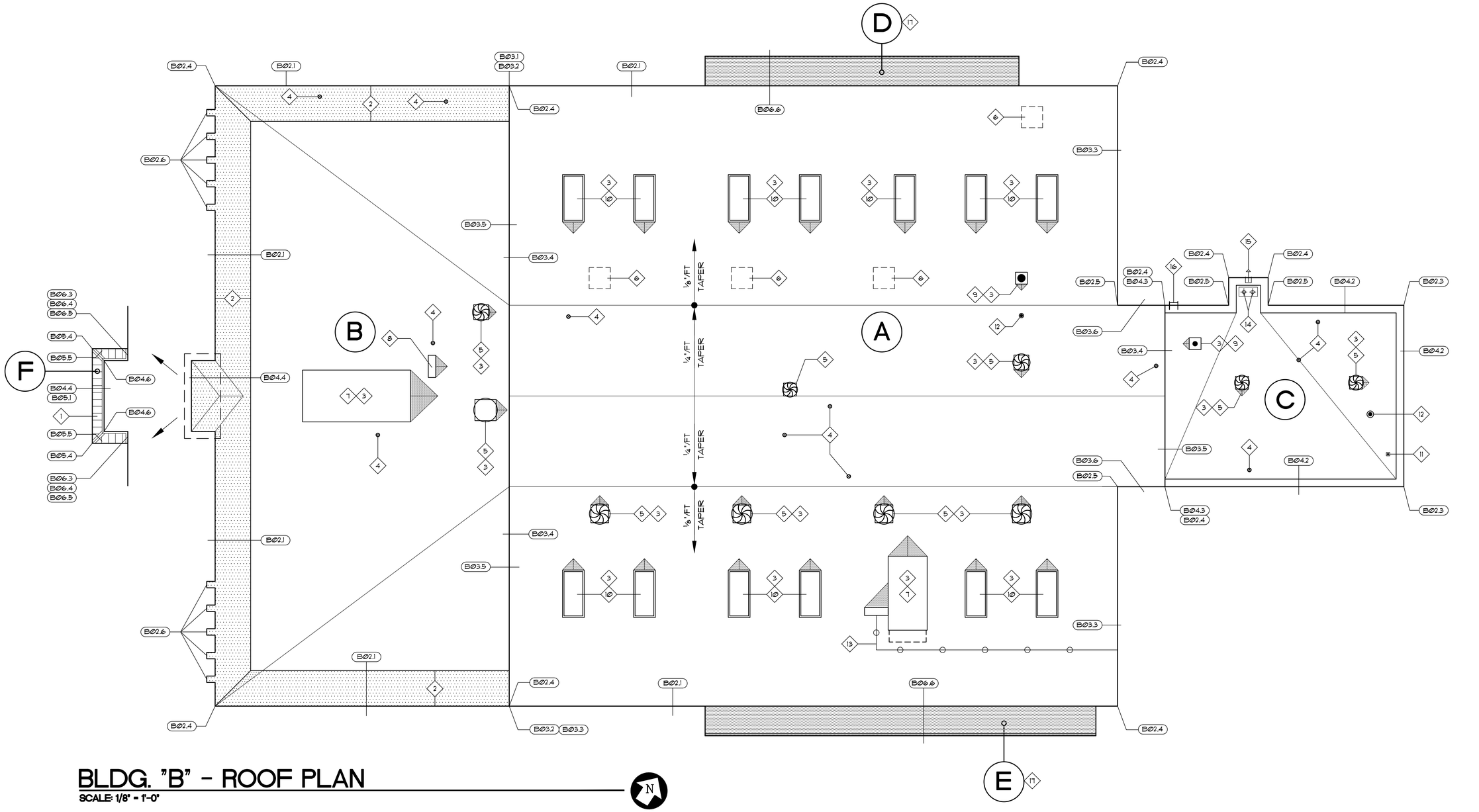

BLDG. "B" - ROOF PLAN

SCALE: 1/8" = 1'-0"

SPECIFIC PLAN NOTES

33

1. SLOPED MANSARD WITH STANDING SEAM METAL ROOF, REMOVE EXISTING METAL ROOF, REPLACE DAMAGED OR DETERIORATED WOOD BLOCKING AND DECKING AS NEEDED, APPLY NEW UNDERLAYMENT AND INSTALL NEW PRE- FINISHED ALUMINUM STANDING SEAM ROOF SYSTEM.
2. PROVIDE 1/8" PER FOOT TAPERED INSULATION AT PERIMETER 4 FEET OF ROOF TO MINIMIZE STANDING WATER ALONG EDGE OF ROOF, MITER INSULATION BOARDS AT CORNERS AS NEEDED. (SEE EDGE FLASHING DETAIL B02.1)
3. PROVIDE DRAINAGE CRICKET UPSLOPE OF ALL CURBS AND EQUIPMENT USING TAPERED RIGID INSULATION (1/2" PER FT. -U.N.O.) PRIOR TO APPLICATION OF THE GYPSUM ROOF BOARD.
4. EXISTING PLUMBING VENT THRU ROOF (VTR) TO REMAIN, EXTEND AS REQ'D TO PROVIDE 8" CLEARANCE ABOVE PROPOSED ROOF SURFACE, PROVIDE NEW PRE-FABRICATED PVC CONICAL "BOOT" FLASHING PER DETAIL B09.1. EXTEND PIPE EITHER BY EXTENDING PIPE FROM THE UNDERSIDE OF THE ROOF DECK, OR USING OMG "TUBOS" VENT STACK EXTENSIONS.
5. REMOVE AND REINSTALL EXISTING POWER 4/OR GRAVITY VENT AS REQ'D. TO INSTALL NEW FLASHINGS, RAISE CURB TO PROVIDE 10" MIN. FLASHING HEIGHT AND EXTEND DUCT AND ELECTRICAL SERVICE AS REQ'D., REINSTALL EXIST. VENT, SEE DETAIL B08.1.
6. REMOVE EXISTING ABANDONED CURB TO EXPOSE ROOF DECK, INSTALL NEW METAL DECK AND INFILL DECK OPENING TO MATCH EXISTING DECK FLUSH WITH EXISTING PER DETAIL B09.3.
7. REMOVE EXISTING PACKAGE A/C UNIT AS REQ'D. TO INCREASE CURB HEIGHT AND INSTALL NEW COUNTERFLASHING RECEIVER PER DETAIL B07.1. REINSTALL EXISTING A/C UNIT, EXTEND DUCTWORK, PIPING & ELEC. SERVICE AS REQ'D, & RECONNECT.
8. EXISTING DECK MOUNTED WEATHERHEAD TO BE REMOVED AND REPLACED WITH NEW CURB AND WEATHERHEAD PER THE PROJECT DETAIL B07.5. MODIFY AND RECONNECT PIPING AND OTHER SERVICES AS REQUIRED.
9. EXISTING HOT STACK TO BE REFURBISHED, REMOVE AND INSTALL NEW METAL CURB, STAINLESS STEEL HOT STACK, AND SQUARE-TO-ROUND CURB CAP PER DETAILS B08.2 & B08.3.
10. REMOVE EXISTING UNIT SKYLIGHT, RAISE CURB TO PROVIDE 10" MIN. FLASHING HEIGHT AND INSTALL NEW FLASHING PER DETAIL B09.2. PROVIDE AND INSTALL NEW DOUBLE DOME UNIT SKYLIGHT, SECURE PER MANUFACTURER.
11. EXISTING COPPER VENT / RELIEF DISCHARGE PIPE TO REMAIN, (EXTEND AS REQUIRED IN "LIKE-KIND"), INSTALL NEW ST. STL. COLLAR FLASHING WITH RAIN CAP, FLASH PER DETAIL B08.6.
12. EXISTING EXHAUST FLUE (OR GENERATOR EXHAUST) TO REMAIN, (EXTEND AS REQ'D. IN "LIKE-KIND"), INSTALL NEW INSULATED ST. STL. COLLAR FLASHING WITH RAIN CAP, FLASH PER DET. B08.5.
13. REMOVE EXISTING CONDENSATE PIPING AND ASSOCIATED SUPPORTS AS REQ'D TO INSTALL NEW ROOF SYSTEM, INSTALL NEW PAINTED (GRAY) SCH. 80 PVC CONDENSATE PIPING ON NEW COMPOSITE SUPPORTS AT 4'-0" O.C. (MAX.) PER DETAIL B09.4. MATCH SIZE & ROUTING OF EXISTING PIPE TO DRAIN AT GRADE.
14. INSTALL NEW 6" DIA. PVC COATED ALUM. RETROFIT DRAINS WITH PVC PIPE EXTENSIONS AND SECURE AT EXISTING DRAIN LOCATIONS PER DETAIL B10.1.
15. CUT MASONRY WALL AS REQUIRED TO INSTALL NEW 16" WIDE x 5' HIGH (MIN.) THRU-WALL OVERFLOW SCUPPER FABRICATION AT EXISTING DRAINS - SEE DETAIL B10.2 AND B10.3.
16. REMOVE EXISTING WALL MOUNTED ROOF ACCESS LADDER AND INSTALL NEW WALL MOUNTED ROOF ACCESS LADDER, SEE DETAIL B09.5.
17. EXISTING CAST-IN-PLACE CONCRETE CANOPY TO REMAIN. REMOVE REMNANTS OF EXISTING ROOFING, CLEAN AND PREPARE TOP SURFACE AS RECOMMENDED BY THE MANUFACTURER. APPLY NEW POLYURETHANE SURFACING COATING, REINFORCE AT LOCATIONS / CONDITIONS IDENTIFIED BY THE MANUFACTURER.

SYMBOLS LEGEND

- PERIMETER EDGE
- PARAPET
- TAPER LINE
- ROOF DRAIN
- SANITARY VENT
- POWER VENT
- SKYLIGHT
- HOT STACK
- MISC. ROOF PENETRATION
- ROOF AREA IDENTIFICATION
- SPECIFIC NOTE
- B02.1 — DETAIL REFERENCE (DETAIL NUMBER / DRAWING)

A/R/C Associates Incorporated

Architecture
Roof Consulting
Construction Technology
LIC. NBR AAC000932
601 North Fern Creek Avenue
Suite 100 Orlando, FL
32803-4899
Tel. (407) 896-7875
Fax. (407) 896-6043

COPYRIGHT © 2020 A/R/C ASSOCIATES, INC.

--/--/--

JAMES W. RIPLEY AR-12758

REVISIONS		
NO.	DATE	BY:

ROOF REPLACEMENT AT:

SJCSB PROJECT NO: 2020-35

FIRST COAST TECHNICAL COLLEGE - BUILDINGS "B"
2980 COLLINS AVE. ST. AUGUSTINE, FL 32084
ST. JOHNS COUNTY SCHOOL DISTRICT

ROOF PLAN AND SPECIFIC NOTES

JOB NO.:	20021.00
DRAWN BY:	JPP
CHECKED BY	JWR
DATE	11/06/20
SCALE:	1=1
PLOT SCALE:	AS NOTED

A02

SHEET NO.: 19072.00

GENERAL ROOFING NOTES

1. THE DIMENSIONS SHOWN ON THE ROOF PLANS OF THIS PROJECT WERE TAKEN FROM THE OWNER'S ARCHITECTURAL DOCUMENTS OR ARE THE RESULT OF FIELD MEASUREMENTS TAKEN BY A/R/C ASSOCIATES. THIS INFORMATION IS GIVEN TO ASSIST PROSPECTIVE BIDDERS IN ESTABLISHING THE APPROXIMATE SCOPE OF THE PROJECT, AS A PRE-REQUISITE FOR BIDDING THE PROJECT. HOWEVER, ALL DIMENSIONS SHALL BE FIELD VERIFIED BY EACH BIDDER SO THAT THE DIMENSIONS UTILIZED IN BIDDING THE PROJECT WILL BE THOSE DIMENSIONS TAKEN, CONFIRMED OR CORRECTED BY THE BIDDER. THE CONTRACTOR SHALL VERIFY ALL DIMENSIONS, DETAILS, AND EQUIPMENT NOTED AND SHALL NOTIFY THE ARCHITECT OF ANY DISCREPANCIES PRIOR TO PROCEEDING WITH THE WORK.
2. THE ROOF PLAN IS GENERAL IN NATURE & INDICATES APPROXIMATE EXISTING CONDITIONS AT THE PROJECT SITE. ALL BLDGS. ON THE SITE ARE INCLUDED IN THE PROJECT UNLESS SPECIFICALLY NOTED OTHERWISE (N.I.C.). THE CONTRACTOR SHALL BE RESPONSIBLE FOR A VISUAL FIELD SURVEY (PRIOR TO BID) IN REGARD TO QUANTITIES, & VERIFICATION OF CONFORMANCE WITH THE LOCAL BUILDING CODE.
3. PRIOR TO THE START OF ANY WORK, THE CONTRACTOR WITH THE PROJECT ARCHITECT AND OWNERS REPRESENTATIVE SHALL VISIT THE SITE AND PHOTO AND VIDEO TAPE THE ROOF AND ALL SPACES UNDERNEATH THAT MAY BE AFFECTED BY THIS ROOFING PROJECT IN ORDER TO DETERMINE THE CONTRACTOR'S RESPONSIBILITY IN KEEPING THOSE ITEMS IN THEIR CURRENT STATUS, SPECIAL ATTENTION SHALL BE GIVEN TO CEILING TILES, LIGHT FIXTURES, EXTERIOR AND INTERIOR WALL FINISHES, AND SIDEWALKS, ETC. PARTICULARLY IN THOSE AREAS WHERE EXISTING LEAKS ARE PRESENT.
4. ALL MECHANICAL SYSTEMS & INDIVIDUAL COMPONENTS (EQUIPMENT) SHALL BE OPERATED IN THE PRESENCE OF REPRESENTATIVES OF BOTH THE CONTRACTOR AND OWNER PRIOR TO ANY DEMOLITION OR DISCONNECTION OF MECHANICAL FUNCTIONS, IN ORDER TO ESTABLISH WORKING ORDER AND OPERATING CONDITIONS.
5. CONTRACTOR SHALL EXERCISE CARE DURING DEMOLITION AND REMOVAL TO ASSURE THAT ITEMS SCHEDULED FOR DEMOLITION ARE PROPERLY REMOVED AND ITEMS TO REMAIN AND/OR TO BE RELOCATED ARE PROTECTED FROM DAMAGE. ALL SALVAGEABLE ITEMS REMOVED THAT ARE NOT TO RE REUSED SHALL BE DISPOSED OF AS DIRECTED BY THE OWNER.
6. NO EXISTING FACILITY SHALL BE OCCUPIED DURING REMODELING OR RENOVATION UNLESS ALL EXISTING EXITS AND ANY EXISTING FIRE PROTECTION ARE CONTINUOUSLY MAINTAINED, OR IN LIEU THEREOF OTHER MEASURES ARE TAKEN WHICH PROVIDE EQUIVALENT SAFETY.
7. VERIFY LOCATIONS OF ALL ROOFTOP EQUIPMENT AND ROOF PENETRATIONS SO AS TO AVOID CONFLICT WITH WALLS, ROOF EDGES, AND OTHER PENETRATIONS. RELOCATE ANY SUCH EQUIPMENT OR ROOF PENETRATIONS A MINIMUM OF TWO FEET AWAY FROM OTHER ROOFTOP EQUIPMENT, WALLS, ROOF EDGES OR OTHER PENETRATIONS SO AS TO ELIMINATE THIS CONFLICT.
8. CONTRACTOR SHALL NOT USE ANY HEAVY MACHINERY ON THE ROOF (BOBCATS, ETC.)
9. REMOVE PITCH PANS AND/OR SECTIONS OF CONDUITS PROTRUDING FROM THE ROOF. VERIFY IF CONDUIT WIRING IS ELECTRIFIED PRIOR TO CUTTING. ALL LOOSE CABLES FOUND ON THE ROOF ARE TO BE PLACED IN CONDUIT. CONDUIT, CABLES, DUCTWORK AND PIPING, MAY NOT BE SHOWN, FOR THE PURPOSE OF CLARITY. VERIFY THOSE CONDITIONS PRIOR TO BIDDING.
10. REMOVE AND INFILL AS NECESSARY ANY, AND ALL SMALL ROOF PENETRATIONS WHICH HAVE BEEN ABANDONED, SUCH AS PITCH PANS, SMALL CONDUITS, MEMBRANE VENTS, ETC. NOT ALL OF THESE ARE SHOWN ON THE DRAWINGS.
11. IN THE EVENT OF WATER DAMAGE TO THE INTERIOR OF STRUCTURES, A DAMAGE REPORT, WITH PHOTOGRAPHS SHALL BE COMPLETED BY THE PROJECT ARCHITECT. THE REPORT SHALL BE SUBMITTED TO THE OWNER AND THE CONTRACTOR FOR THEIR RECORDS.
12. NOTIFY THE LOCAL POLICE OFFICIALS, THE OWNER OR ARCHITECT BY TELEPHONE IN EACH INSTANCE OF PROPERTY DAMAGE RESULTING FROM FIRE, WATER DAMAGE, ILLEGAL ENTRY, VANDALISM, THEFT OR BURGLARY, OR VEHICLE DAMAGE WITHIN 24 HOURS OF DISCOVERING THE INCIDENT.
13. CONTRACTOR SHALL OBTAIN AND SUBMIT TO THE ARCHITECT, AN UPDATED ROOF SURVEY FOR SLOPED ROOF DECKS AFTER THE REMOVAL OF THE OLD (EXISTING) ROOF SYSTEM AND PRIOR TO THE INSTALLATION OF THE NEW ROOFING SYSTEM IF DRAINAGE SLOPES AND PATTERNS VARY SIGNIFICANTLY FROM EXISTING CONDITIONS.
14. DETAILS REFERENCED ON THE CONTRACT DRAWINGS ARE 'TYPICAL' AND ARE NOT CUT AT EVERY LOCATION WHERE THE CONDITION OCCURS. BID AND EXECUTE A COMPLETE PROJECT AS IF DETAILS WERE 'CUT' AT EVERY LOCATION WHERE SUCH CONDITION OR SIMILAR CONDITION OCCURS.
15. PERIMETER COPING MAY VARY IN DIMENSIONAL REQUIREMENTS. THE BIDDERS IS TO VERIFY BLOCKING REQUIREMENTS IN EACH ROOF AREA PRIOR TO BIDDING.
16. SHEET METAL DETAILS AND TRANSITIONS NOT SHOWN SHALL BE REQUIRED AS IF SHOWN. PREPARE, AND SUBMIT SHOP DRAWINGS OF THESE REQUIREMENTS TO THE ARCHITECT FOR APPROVAL PRIOR TO SHOP FABRICATION.
17. ALL NEW AND EXISTING ROOF MOUNTED EQUIPMENT, CURBS, PIPE SUPPORTS, WOODWORK AND SHEET METAL WORK SHALL BE SECURED WITH FASTENERS AND/OR STAINLESS STEEL CABLE HOLD-DOWNS TO SAFELY RESIST WIND FORCES AS COMPUTED ACCORDING TO ASCE 7, AND AS INDICATED WITHIN FLORIDA BLDG. CODE DATA.
18. CONTRACTOR SHALL BE RESPONSIBLE FOR REPAIR AND PAINTING / FINISHING OF ALL SURFACES EXPOSED OR DAMAGED AS A RESULT OF ROOFING REPLACEMENT. WORK NOT COVERED BY NEWLY INSTALLED WORK. REPAIRS AND FINISHES SHALL MATCH EXISTING ADJACENT CONDITIONS TO REMAIN UNCHANGED.
19. CONTRACTOR SHALL BE RESPONSIBLE TO REMOVE, REINSTALL, OR REPLACE ALL CEILING PANELS AND/OR CEILING GRIDS WHICH MAY HAVE BEEN DISTURBED OR DAMAGED DURING THE CONSTRUCTION PROCESS.
20. ANY EQUIPMENT, VENTS, CURBS, ETC. FOUND UNDER EXISTING ROOF ARE TO BE BROUGHT TO THE ATTENTION OF THE ARCHITECT IN WRITING FOR PROPER COORDINATION.
21. VERIFY PRECISE LOCATIONS OF EXPANSION JOINTS SHOWN ON THE ROOF PLANS AND ALSO LOCATIONS OF DECK CHANGES FROM THE UNDERSIDE OF DECK. TRANSFER LOCATION OF THESE JOINTS TO THE TOP OF THE ROOF DECK PRIOR TO CONSTRUCTING THE EXPANSION JOINT CURBS. COORDINATE ANY NEW LOCATIONS WITH ARCHITECT.
22. CONTRACTOR SHALL PROVIDE ALL SUPPLEMENTAL MATERIALS REQUIRED TO PROPERLY INSTALL, SUPPORT AND BRACE ALL ITEMS AND COMPONENTS WITHIN THE WORK.
23. CONTRACTOR SHALL COMPLETE AND SUBMIT FORM 1525, AS PER FBC 2017, FOR ROOFING APPLICATION PERMIT, AS WELL AS ANY OTHER ASSOCIATED DATA, CALCULATIONS, PRODUCT APPROVALS, ETC. AS MAY BE REQUIRED BY THE PERMITTING AUTHORITIES.

ABBREVIATIONS

ADJ	ADAJACENT
A/C	AIR CONDITIONING
ALT	ALTERNATE
ALUM	ALUMINUM
ANOD	ANODIZED
APPROX	APPROXIMATE
ARCH	ARCHITECT(URAL)
BRG	BEARING
BIT	BITUMINOUS BITUMEN
BLK	BLOCK
BLKG	BLOCKING
BD	BOARD
BOT	BOTTOM
BLDG	BUILDING
BUR	BUILT UP ROOF
CIP	CAST-IN-PLACE
CB	CATCH BASIN
CLG	CEILING
COL	COLUMN
COMP	COMPRESS, (ION), (IBLE)
CONC	CONCRETE
CMU	CONCRETE MASONRY UNIT
CONST	CONSTRUCTION
CONT	CONTINUOUS OR CONTINUE
CJ	CONTROL JOINT
CTR	CENTER
C.F.	CUBIC FOOT
DEMO	DEMOLISH, DEMOLITION
DET	DETAIL
DIAG	DIAGONAL
DIA	DIAMETER
DIM	DIMENSION
DS	DOWNSPOUT
DWG	DRAWING
E	EAST
ELEC	ELECTRIC(AL)
EL (ELEV)	ELEVATION
EQ	EQUAL
EQUIP	EQUIPMENT
EXH	EXHAUST
EXIST	EXISTING
EXP	EXPANSION
EXT	EXTERIOR
FIN	FINISH(ED)
FLASH	FLASHING
FLEX	FLEXIBLE
FTG	FOOTING
FDN	FOUNDATION
GA	GAGE (GAUGE)
GALV	GALVANIZED
GWB	GYPSUM WALL BOARD
HDWE	HARDWARE
HVAC	HEATING/VENTILATION /AIR CONDITIONING
HT (HGT)	HEIGHT
HM	HOLLOW METAL
HORIZ	HORIZONTAL
INCL	INCLUDE(D), (ING)
ID	INSIDE DIAMETER INSIDE DIMENSION
INSUL	INSULATE(D), (ION)
INT	INTERIOR
JT	JOINT
LW	LIGHTWEIGHT
LLH	LONG LEG HORIZONTAL
LLV	LONG LEG VERTICAL
MFR	MANUFACTURE(ER)
MATL	MATERIAL(S)
MAX	MAXIMUM
MECH	MECHANIC(AL)
MTL	METAL
MIN	MINIMUM
MISC	MISCELLANEOUS
MOD	MODIFY / MODIFIED
MTD	MOUNTED(ING)
NOM	NOMINAL
N	NORTH
NIC	NOT IN CONTRACT
NTS	NOT TO SCALE
NO	NUMBER
OC	ON CENTER(S)
OCEW	ON CENTER EACH WAY
OPG	OPENING
OPP	OPPOSITE
OD	OUTSIDE DIAMETER OUTSIDE DIMENSION
PTD	PAINT(ED)
PR	PAIR
PL	PLATE
PLYWD	PLYWOOD
PVC	POLYVINYL CHLORIDE
PSF	POUNDS PER SQUARE FOOT
PSI	POUNDS PER SQUARE INCH
PC	PRECAST CONCRETE
PT	PRESSURE TREATED
RAD	RADIUS
RWL	RAINWATER LEADER
REF	REFERENCE
REINF	REINFORCE (D), (MENT)
RCP	REINF. CONCRETE PIPE
REV	REVISION
RD	ROOF DRAIN
RO	ROUGH OPENING
SCH	SCHEDULE
SEAL	SEALANT
SHT	SHEET
SIM	SIMILAR
S	SOUTH
SPK	SPEAKER
SPEC	SPECIFICATION(S)
SQ	SQUARE
SF	SQUARE FEET
ST STL	STAINLESS STEEL
STD	STANDARD
STL	STEEL
STRUCT	STRUCTURAL
THK	THICK(NESS)
T & G	TONGUE AND GROOVE
TYP	TYPICAL
UNO	UNLESS NOTED OTHERWISE
VERT	VERTICAL
WWF	WELDED WIRE FABRIC
W	WEST
WM	WIRE MESH
W/	WITH
W/O	WITHOUT
WD	WOOD

ROOF COMPONENT FASTENING SCHEDULE

A. GENERAL NOTES:

1. THIS SCHEDULE AND THE FASTENING METHODS INDICATED HEREIN ARE INTENDED TO ADDRESS TYPICAL CONDITIONS, AND MAY NOT APPLY TO ALL CONDITIONS FOR THIS PROJECT.
2. CONTRACTOR / INSTALLER MUST ALSO REFER TO THE DETAILS FOR THIS SPECIFIC PROJECT. IN THE CASE OF CONFLICTING DATA, THE PROJECT SPECIFIC DETAILS SHALL GOVERN.
3. FOR ALL CONDITIONS NOT COVERED WITHIN SCHEDULE, REFER TO FASTENER REQUIREMENTS OF THE SPECIFICATIONS OR CONSULT WITH THE ARCHITECT.
4. MANUFACTURERS OF SPECIALITY FASTENER SHALL PERFORM FIELD TESTS TO VERIFY WITHDRAWAL VALUES AND FASTENING PATTERNS FOR THE SPECIFIC PROJECT CONDITIONS PRIOR TO INSTALLATION. A WRITTEN REPORT SHALL BE SUBMITTED TO THE ARCHITECT FOR REVIEW AND APPROVAL.
5. ALL EXPOSED FASTENERS AND THOSE USED IN PRESSURE TREATED LUMBER SHALL BE STAINLESS STEEL, ALL OTHERS MUST HAVE A CORROSION RESISTANT COATING THAT EXCEEDS F.M. APPROVAL STANDARD 4470, UNLESS NOTED OTHERWISE.
6. ALL FASTENERS AND THEIR INSTALLATION METHODS MUST COMPLY WITH THE REQUIREMENTS DEFINED IN THE FLORIDA BUILDING CODE, ROOFING APPLICATION STANDARD (RAS) NO. 111 - "STANDARD REQUIREMENTS FOR ATTACHMENT OF PERIMETER WOOD BLOCKING AND METAL FLASHINGS", UNLESS NOTED OTHERWISE.

B. WOOD BLOCKING (2" NOMINAL THICKNESS):

1. CONCRETE: 3/8" DIA. ST. STL. SELF-TAPPING MASONRY SCREW AT 16" O.C., MAX., LENGTH AS REQUIRED FOR 1.75" MIN. EMBEDMENT. OPTION: 5/16" DIA. DEFORMED OR FLUTED NAIL AT 12" O.C. MAX., LENGTH AS REQUIRED FOR 1.25" MIN. EMBEDMENT. COUNTERSINK HEADS AS REQUIRED.
2. CONCRETE BLOCK (CMU): 3/8" DIA. ST. STL. SELF-TAPPING MASONRY SCREW AT 12" O.C., MAX., LENGTH AS REQUIRED FOR 1.75" MIN. EMBEDMENT. OPTION: 3/8" DIA. HEAVY DUTY SLEEVE STYLE EXPANSION BOLT ANCHOR (RAWL-BOLT) @ 18" O.C., LENGTH AS REQUIRED FOR 2" MIN. EMBEDMENT. COUNTERSINK HEADS AS REQUIRED.
3. BRICK: 3/8" DIA. ST. STL. SELF-TAPPING MASONRY SCREW AT 12" O.C., MAX., LENGTH AS REQUIRED FOR 1.75" MIN. EMBEDMENT. OPTION: 3/8" DIA. HEAVY DUTY SLEEVE STYLE EXPANSION BOLT ANCHOR (RAWL- BOLT) @ 18" O.C., LENGTH AS REQUIRED FOR 2" MIN. EMBEDMENT. COUNTERSINK HEADS AS REQUIRED.
4. STRUCTURAL STEEL: 1/4" DIA. ST. STL. SELF-DRILLING, SELF-TAPPING SCREWS WITH "WINGS" @ 16" O.C. MAX., LENGTH AS REQUIRED FOR 1/2" MIN. PENETRATION OF THREADS THROUGH STEEL. COUNTERSINK HEADS AS REQUIRED.
5. METAL DECK: 1/4" DIA. ST. STL. SELF-TAPPING "DECK" SCREWS AT 12" O.C. MAX., LENGTH AS REQUIRED FOR 1/2" MIN. PENETRATION THROUGH UNDERSIDE OF DECK. COUNTERSINK HEADS REQUIRED.
6. LIGHT GAGE METAL FRAMING: 1/4" DIA. ST. STL. SELF-TAPPING "DECK" SCREWS, ONE MIN. PER FRAMING MEMBER, LENGTH AS REQ'D FOR 1/2" MIN. PENETRATION THROUGH FRAMING. COUNTERSINK HEADS AS REQUIRED.
7. PLYWOOD DECK: 1/4" DIA. ST. STL. SELF-TAPPING "DECK" SCREWS, ONE MIN. PER FRAMING MEMBER, LENGTH AS REQ'D FOR 1/2" MIN. PENETRATION THROUGH UNDERSIDE OF DECK. COUNTERSINK HEADS AS REQUIRED.
8. WOOD BLOCKING: 1/4" DIA. ST. STL. SELF-TAPPING "DECK" SCREWS AT 12" O.C. MAX., LENGTH AS REQUIRED FOR 1.50" MIN. EMBEDMENT. OPTION: TWO 3/8" DIA. CONTINUOUS BEADS OF CONSTRUCTION ADHESIVE THE FULL LENGTH OF THE BOARD TO BE APPLIED, & 12d NAILS @ 4" O.C. (IN 2 ROWS-STAGGERED).

C. PLYWOOD SHEATHING:

1. CONCRETE: 1/4" DIA. ST. STL. SELF-TAPPING MASONRY SCREWS AT 12" O.C. MAX. (AT EDGES), AND 16" O.C. MAX. IN THE FIELD, LENGTH AS REQUIRED FOR 1.50" MIN. EMBEDMENT. OPTION: 1/4" DIA. DEFORMED OR FLUTED NAIL AT SAME SPACING AS ABOVE, LENGTH AS REQ'D. FOR 1¼" MIN. EMBEDMENT.
2. CONCRETE BLOCK (CMU): 1/4" DIA. ST. STL. SELF-TAPPING MASONRY SCREWS AT 12" O.C. MAX. (AT EDGES), AND 16" O.C. MAX. IN THE FIELD, LENGTH AS REQUIRED FOR 1.50" MIN. EMBEDMENT. OPTION: 1/4" DIA. DEFORMED OR FLUTED NAIL AT SAME SPACING AS ABOVE, LENGTH AS REQ'D. FOR 1¼" MIN. EMBEDMENT.
3. BRICK: 1/4" DIA. ST. STL. SELF-TAPPING MASONRY SCREWS AT 12" O.C. MAX. (AT EDGES), AND 16" O.C. MAX. IN THE FIELD, LENGTH AS REQUIRED FOR 1.50" MIN. EMBEDMENT. OPTION: 1/4" DIA. DEFORMED OR FLUTED NAIL AT SAME SPACING AS ABOVE, LENGTH AS REQ'D. FOR 1¼" MIN. EMBEDMENT.
4. STRUCTURAL STEEL: #10 DIA. ST. STL. SELF-DRILLING, SELF-TAPPING SCREWS WITH "WINGS" AT 12" O.C. MAX. (AT EDGES), AND 16" O.C. MAX. IN THE FIELD, LENGTH AS REQ'D. FOR 1/2" MIN. PENETRATION OF THREADS THROUGH STEEL.
5. METAL DECK: #10 DIA. SELF-TAPPING "DECK" SCREWS AT 12" O.C. MAX. (AT EDGES), AND 16" O.C. MAX. IN THE FIELD, LENGTH AS REQUIRED FOR 1/2" MIN. PENETRATION THROUGH UNDERSIDE OF DECK.
6. LIGHT GAGE METAL FRAMING: #10 DIA. SELF-TAPPING "DECK" SCREWS AT 12" O.C. MAX. (AT EDGES),AND 16" O.C. MAX. ALONG EACH FRAMING MEMBER, LENGTH AS REQ'D FOR 1/2" MIN. PENETRATION THROUGH. FRAMING. FRAMING TO BE SPACED AT 24" O.C. MAX., UNLESS NOTED OTHERWISE BY DETAILS.
7. WOOD FRAMING: #10 DIA. SELF-TAPPING "DECK" SCREWS AT 12" O.C. MAX. ALONG EACH FRAMING MEMBER, LENGTH AS REQUIRED FOR 1.50" MIN. EMBEDMENT. OPTION: 8d ANNULAR RING NAILS AT 6" O.C. MAX. (AT EDGES) AND 12" O.C. MAX. IN FIELD OF PANEL. DECREASE SPACING AT ROOF EDGE & CORNER WIND ZONES TO 4" O.C. MAX. AT EDGES, AND 8" O.C. MAX. IN FIELD.

D. METAL DECKING:

1. INSTALL AND SECURE PER STEEL JOIST INSTITUTE (SJI) GUIDELINES, SEE SPECIFICATIONS OR STRUCTURAL DETAILS FOR ADDITIONAL INFORMATION.

E. MINOR STRUCTURAL STEEL:

1. ANCHORAGE OF LOAD BEARING STEEL AND LARGE STEEL FABRICATIONS, (SUCH AS LADDERS), IS TO BE AS DEFINED BY STRUCTURAL ENGINEERING DRAWINGS, OR AS ENGINEERED BY THE SUPPLIER. MINOR STRUCTURAL STEEL WOULD BE CONSIDERED ITEMS SUCH AS SUPPORT STANDS, WALL LEDGER ANGLES, ETC.
2. CONCRETE: 3/8" DIA. HEAVY-DUTY, SLEEVE STYLE EXPANSION BOLT ANCHOR (RAWL-BOLT) @ 16" O.C., LENGTH AS REQ'D FOR 2" MIN. EMBEDMENT.
3. CONCRETE BLOCK (CMU): 3/8" DIA. HEAVY-DUTY, SLEEVE STYLE EXPANSION BOLT ANCHOR (RAWL-BOLT) @ 16" O.C., LENGTH AS REQUIRED FOR 2" MIN. EMBEDMENT. IF CMU IS HOLLOW, BREAK INTO BLOCK ABOVE, AND FILL CELL OF BLOCK TO RECEIVE ANCHOR SOLID, PERFORM ANY REPAIR AND PATCHING NECESSARY
4. BRICK: 3/8" DIA. HEAVY-DUTY, SLEEVE STYLE EXPANSION BOLT ANCHOR (RAWL-BOLT) @ 16" O.C., LENGTH AS REQ'D FOR 2" MIN. EMBEDMENT.
5. STRUCTURAL STEEL: 1/4" DIA. ST. STL. SELF-DRILLING, SELF-TAPPING SCREWS @ 16" O.C. MAX., LENGTH AS REQUIRED FOR 1/2" MIN. PENETRATION OF THREADS THROUGH STEEL.

F. RIGID INSULATION BOARD:

1. INSTALL AND SECURE PER THE MANUFACTURER'S RECOMMENDATIONS, TESTING AND APPROVALS TO COMPLY WITH THE DESIGN REQUIREMENTS OF THIS PROJECT. SEE PROJECT SPECIFICATIONS AND FASTENING DETAIL FOR ADDITIONAL INFORMATION.

G. ROOF MEMBRANE SYSTEM:

1. INSTALL AND SECURE PER THE MANUFACTURER'S RECOMMENDATIONS, TESTING AND APPROVALS TO COMPLY WITH THE DESIGN REQUIREMENTS OF THIS PROJECT. SEE PROJECT SPECIFICATIONS AND FASTENING DETAIL FOR ADDITIONAL INFORMATION.

H. FLANGED SHEETMETAL (EDGE METAL):

1. WOOD BLOCKING: #12 GAGE x 1.50" ANNULAR RING STAINLESS STEEL ROOFING NAILS AT 4" O.C. MAX., STAGGERED IN 2 ROWS INSET AT 3/4"± FROM EACH EDGE OF THE FLANGE.
2. LIGHTGAGE METAL: #10 DIA. STAINLESS STEEL, SELF TAPPING, WAFER OR FLAT HEAD SCREWS AT 12" O.C. MAX., 8" O.C. WITHIN ROOF CORNER ZONES, LENGTH AS REQUIRED FOR 1/2" MIN. PENETRATION OF THREADS THROUGH STEEL.
3. CONCRETE: 3/16" DIA. ST. STL. SELF-DRILLING, SELF-TAPPING, MASONRY SCREW, LENGTH AS REQUIRED FOR 1.50" MIN. EMBEDMENT. OPTION: 1/4" DIA. x 1.50" LONG ZAMAC "NAIL-IN" DRIVE PIN, EXPANSION TYPE FASTENER WITH A STAINLESS STEEL DRIVE PIN. INSTALL AT 12" O.C. MAX., 8" O.C. WITHIN ROOF CORNER ZONES

I. CLEATS FOR SHEETMETAL FLASHINGS:

1. WOOD BLOCKING: #12 GAGE x 1.50" ANNULAR RING, STAINLESS STEEL ROOFING NAILS AT 8" O.C. MAX., (4" O.C. AT CORNER ZONES OF ROOF)
2. LIGHTGAGE METAL: #10 DIA. STAINLESS STEEL, SELF TAPPING, WAFER OR FLAT HEAD SCREWS, LENGTH AS REQ'D FOR ½" MIN. PENETRATION OF THREADS THROUGH STEEL, LOCATE AT 10" O.C. MAX., 6" O.C. WITHIN ROOF CORNER ZONES.
3. CONCRETE: 3/16" DIA. ST. STL. SELF-DRILLING, SELF-TAPPING, MASONRY SCREW, LENGTH AS REQUIRED FOR 1.50" MIN. EMBEDMENT. OPTION: 1/4" DIA. x 1.50" LONG ZAMAC "NAIL-IN" DRIVE PIN, EXPANSION TYPE FASTENER WITH A STAINLESS STEEL DRIVE PIN. INSTALL AT 10" O.C. MAX., 6" O.C. WITHIN ROOF CORNER ZONES.
4. CONCRETE BLOCK (CMU): 3/16" DIA. ST. STL. SELF-DRILLING, SELF-TAPPING, MASONRY SCREW, LENGTH AS REQUIRED FOR 1.50" MIN. EMBEDMENT. OPTION: 1/4" DIA. x 1.50" LONG ZAMAC "NAIL-IN" DRIVE PIN, EXPANSION TYPE FASTENER WITH A STAINLESS STEEL DRIVE PIN. INSTALL AT 10" O.C. MAX., 6" O.C. WITHIN ROOF CORNER ZONES.
5. BRICK: 1/4" DIA. ST. STL. SELF-DRILLING, SELF-TAPPING, MASONRY SCREW, LENGTH AS REQUIRED FOR 1.50" MIN. EMBEDMENT. OPTION: 1/4" DIA. x 1.50" LONG ZAMAC "NAIL-IN" DRIVE PIN, EXPANSION TYPE FASTENER WITH A STAINLESS STEEL DRIVE PIN. INSTALL AT 10" O.C. MAX., 6" O.C. WITHIN ROOF CORNER ZONES.

J. APPLIED SHEETMETAL (COUNTERFLASHINGS, ETC.):

1. WOOD BLOCKING: #12 DIA. SELF-TAPPING, STAINLESS STEEL SCREWS AT 8" O.C. MAX., LENGTH AS REQUIRED FOR 1.25" MIN. EMBEDMENT INTO WOOD. IF EXPOSED TO THE WEATHER, USE "SCOTS" TYPE SCREW WITH INTEGRAL NEOPRENE SEALING WASHER.
2. SHEETMETAL BACKING: #12" DIA. SELF-TAPPING STAINLESS STEEL SCREWS AT 8" O.C. MAX., LENGTH AS REQ'D FOR 1/2" MIN. PENETRATION OF THREADS THROUGH STEEL. IF EXPOSED TO THE WEATHER PROVIDE "SCOTS" TYPE SCREW WITH INTEGRAL NEOPRENE SEALING WASHER.
3. CONCRETE: 1/4" DIA SELF-TAPPING STAINLESS STEEL MASONRY SCREWS AT 8" O.C. MAX., LENGTH AS REQUIRED FOR 1¼" MIN. EMBEDMENT. OPTION: 1/4" DIA. x 1.50" ZAMAC "NAILIN" DRIVE PIN, EXPANSION TYPE FASTENERS @ 8" O.C. MAX., WITH STAINLESS STEEL DRIVE PIN. IF EXPOSED TO THE WEATHER PROVIDE METAL BACKED NEOPRENE SEALING WASHERS - ADJUST LENGTH AS REQ'D BY OVERLYING FINISH TO MAINTAIN 1.25" MIN. EMBEDMENT INTO CONCRETE.
4. CONCRETE BLOCK (CMU): 1/4" DIA. SELF-TAPPING STAINLESS STEEL MASONRY SCREWS AT 8" O.C. MAX., LENGTH AS REQUIRED FOR 1.25" MIN. EMBEDMENT. OPTION: 1/4" DIA. x 1.50" ZAMAC "NAILIN" DRIVE PIN EXPANSION TYPE FASTENERS @ 8" O.C. MAX., WITH STAINLESS STEEL DRIVE PIN. IF EXPOSED TO THE WEATHER PROVIDE METAL BACKED NEOPRENE SEALING WASHERS- INCREASE LENGTH IF REQ'D BY OVERLYING FINISH FOR 1.25" MIN. EMBEDMENT INTO CONCRETE BLOCK.
5. BRICK: 1/4" DIA. SELF-TAPPING STAINLESS STEEL MASONRY SCREWS AT 8" O.C. MAX., LENGTH AS REQUIRED FOR 1.25" MIN. EMBEDMENT. OPTION: 1/4" DIA. x 1.50" ZAMAC "NAILIN" DRIVE PIN EXPANSION TYPE FASTENERS @ 8" O.C. MAX., WITH STAINLESS STEEL DRIVE PIN. IF EXPOSED TO THE WEATHER PROVIDE METAL BACKED NEOPRENE SEALING WASHERS- INCREASE LENGTH IF REQ'D BY OVERLYING FINISH FOR 1.25" MIN. EMBEDMENT INTO BRICK.

A/R/C Associates Incorporated
Architecture
Roof Consulting
Construction Technology
LIC. NBR AAC000932
601 North Fern Creek Avenue
Suite 100 Orlando, FL 32803-4899
Tel. (407) 896-7875
Fax. (407) 898-6043

COPYRIGHT © 2020 A/R/C ASSOCIATES, INC.

--/--/--

JAMES W. RIPLEY AR-12758

REVISIONS		
NO.	DATE	BY:

SUCSB PROJECT NO: 2020-35

ROOF REPLACEMENT AT:

FIRST COAST TECHNICAL COLLEGE - BUILDINGS "B"
2980 COLLINS AVE. ST. AUGUSTINE, FL 32084
ST. JOHNS COUNTY SCHOOL DISTRICT

GENERAL NOTES, FASTENING SCHEDULE AND ABBREVIATIONS

JOB NO.:	20021.00
DRAWN BY:	JPP
CHECKED BY	JWR
DATE	11/06/20
SCALE:	1=1
PLOT SCALE:	AS NOTED

B01

SHEET NO.: 19072.00

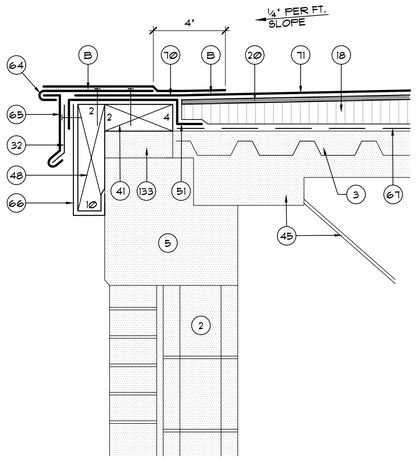

B02.1 MAIN ROOF EDGE FLASHING DETAIL
SCALE: 3" = 1'-0"

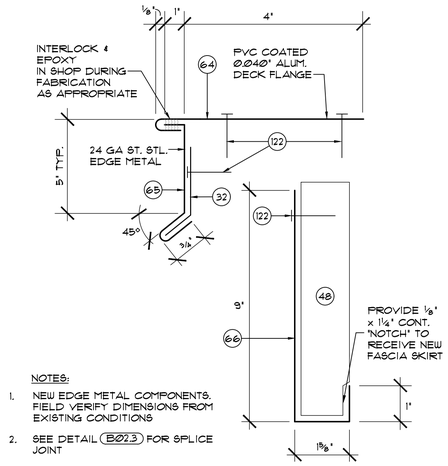

NOTES:

1. NEW EDGE METAL COMPONENTS. FIELD VERIFY DIMENSIONS FROM EXISTING CONDITIONS
2. SEE DETAIL B02.3 FOR SPLICE JOINT

B02.2 MAIN ROOF EDGE METAL FABRICATION DETAIL
SCALE: NONE

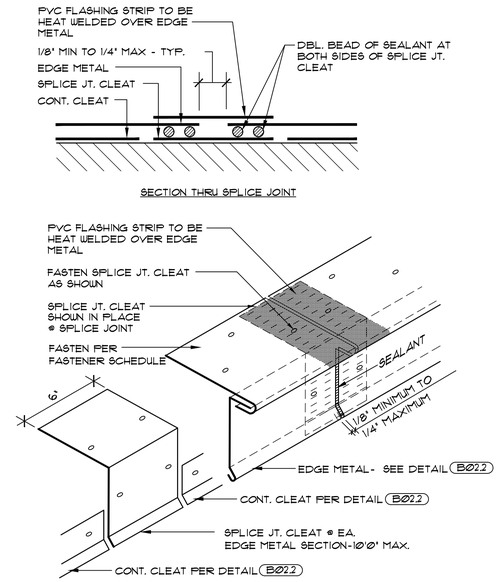

B02.3 TYP. EDGE METAL SPLICE JOINT AND ASSEMBLY DETAIL
SCALE: NONE

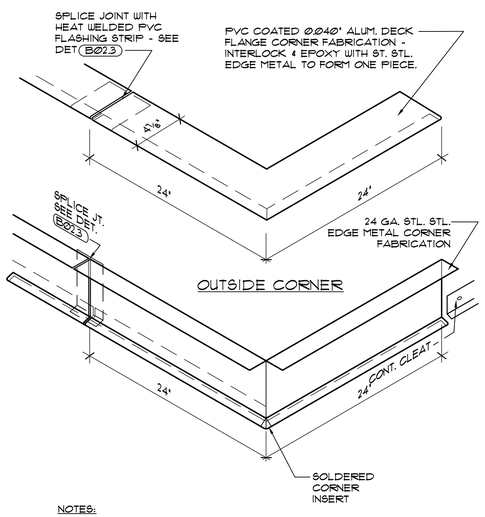

NOTES:

1. SOLDER/WELD (AS PER MTL. TYPE) ALL LAPS & CORNER INSERTS TO FORM ONE CONTINUOUS PIECE
2. DIMENSIONS NOT GIVEN TO BE FIELD VERIFIED

B02.4 OUTSIDE CORNER EDGE METAL FABRICATION DETAIL
SCALE: NONE

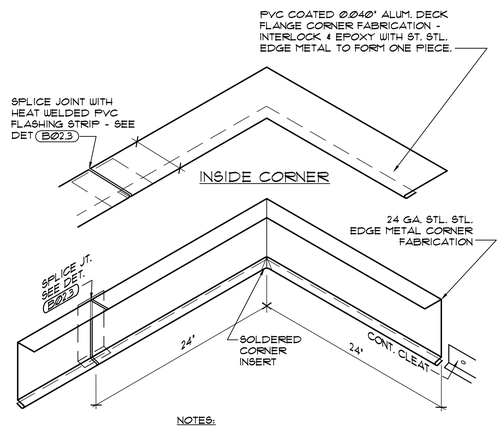

NOTES:

1. SOLDER/WELD (AS PER MTL. TYPE) ALL LAPS & CORNER INSERTS TO FORM ONE CONTINUOUS PIECE

B02.5 INSIDE CORNER EDGE METAL FABRICATION DETAIL
SCALE: NONE

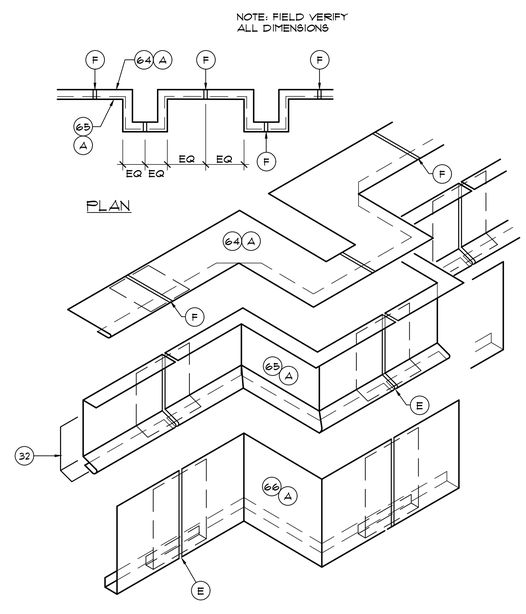

B02.6 EDGE METAL FABRICATION AT PILASTERS
SCALE: NONE

DETAIL NOTES

2. EXISTING MASONRY CAVITY WALL TO REMAIN UNCHANGED.
3. EXISTING LIGHTWEIGHT CONCRETE WITH INTEGRAL EPS INSULATION OVER GALVANIZED STEEL DECK TO REMAIN UNCHANGED.
5. EXISTING CAST-IN-PLACE CONCRETE TIE BEAM TO REMAIN.
9. EXIST. MECHANICAL EQUIPMENT TO BE REUSED & REINSTALLED.
10. EXISTING CURB CONSTRUCTION TO REMAIN, MODIFY AS REQ'D AND AS DETAILED TO INCREASE FLASHING HEIGHT.
11. NEW METAL CURB ASSEMBLY WITH PRESSURE TREATED WOOD BLOCKING AND RIGID INSULATION, SEE DETAIL B08.4
17. NEW 1-1/2" THICK NON-TAPERED RIGID INSULATION IN FIELD.
18. NEW 1/8" PER FOOT TAPERED RIGID INSULATION WHERE INDICATED.
20. NEW 1/4" THICK PRIMED GYPSUM ROOF BOARD - FULLY PRIME.
21. ALUM. TERMINATION BAR, SET "TIGHT" TO ROOF, SEE DETAIL B04.1.
22. 24 GA. ST. STL. COUNTERFLASHING, SEE DETAIL B07.4
23. CONTINUOUS SEALANT - SEE SPECS FOR TYPE.
24. DOUBLE SIDED BUTYL FLASHING TAPE
32. CONT. CLEAT PER DETAIL NOTED - ANCHOR PER FASTENER SCHEDULE.
40. EXISTING PLUMBING VENT STACK TO REMAIN, EXTEND AS REQ'D FROM BELOW DECK OR WITH OMG "TUBOS"
41. NEW 2" THICK (NOM.) (U.N.O.) PRESSURE TREATED WOOD BLOCKING AT EDGE OF ROOF - ANCHOR PER FASTENER SCHEDULE.
42. 5/8" CDX PLYWOOD, ANCHOR AT 12" O.C. AT ALL EDGES, AND AS DEFINED BY FASTENER SCHEDULE
43. ROUND EDGE TO PROTECT MEMBRANE.
44. REMOVE EXISTING FASCIA BOARD AND REPLACE WITH NEW 1 x 8 PRESSURE TREATED FASCIA BOARD, NOTCH & RIP AS SHOWN, SECURE TO EXISTING FASCIA FRAMING.
45. EXISTING STRUCTURE AND/OR FRAMING TO REMAIN UNCHANGED.
46. CONTINUOUS WOOD OR PLYWOOD BLOCKING, FIELD VERIFY SEAM HEIGHT TO DETERMINE THICKNESS REQUIRED.
47. NEW 2" THICK P.T. WOOD BLOCKING, RIP AND TAPER TO MATCH NEW RIGID INSULATION -ANCHOR PER FASTENER SCHEDULE.
48. REMOVE EXIST. FASCIA BOARD AND REPLACE WITH NEW 2 x 10 P.T. FASCIA BD., NOTCH AS SHOWN, SECURE TO EXIST. CONSTRUCTION.
51. SELF-ADHESIVE MOD. BIT. UNDERLAYMENT / "DRY-IN" MEMBRANE.
61. 0.040" ALUM. PVC COATED EDGE METAL DECK FLANGE, "HOOK" TO TRANSITION FLASHING AND SECURE - SEE DETAIL B04.5.
62. PRE-FINISHED 0.040" ALUM. TRANSITION FLASHING - "HOOK" TO Z-CLOSURE & SECURE -SEE DETAIL B04.5.
63. PRE-FINISHED 0.040" ALUM. FASCIA CLADDING - "HOOK" TO WD. BLOCKING & SECURE -SEE DETAIL B05.2.
64. EDGE METAL PVC CLAD ALUM. DECK FLANGE -SEE DETAIL B02.2.
65. TWO-PIECE EDGE METAL ST. STL. FASCIA -SEE DETAIL B02.2.
66. ST. STL. FASCIA SKIRT, "HOOK" TO P.T. FASCIA BD. AND SECURE.
67. FIBERGLASS VENTED BASE SHEET -LOOSE LAID.
70. PVC THERMOPLASTIC SINGLE-PLY FLASHING MEMBRANE
71. PVC THERMOPLASTIC SINGLE-PLY ROOFING MEMBRANE.
73. PREFORMED PVC PIPE FLASHING "BOOT", HEAT WELD TO FIELD.
80. NEW PRE-FINISHED 0.040" ALUMINUM ROOF PANELS.
81. MFR'S. STD. ANCHOR CLIP - SCREW TO PLYWOOD DECK BELOW PER MFR'S RECOMMENDATIONS.
82. NEW PRE-FINISHED 0.050" ALUM. "Z-CLOSURE", SECURE OVER BUTYL TAPE AND SEAL - SEE DETAIL B03.4.
83. "BOX" TOP OF PANEL IN FIELD WITHOUT CUTTING.
84. NEW PRE-FINISHED 0.040" ALUM. DRIP EDGE FLASHING - OVERLAP FASCIA METAL & SECURE -SEE DETAIL B05.2.
86. METAL RIDGE CAP-SLIDE ON OVER "Z-CLOSURE" & SECURE WITH BUTTON PUNCH. PROVIDE SPLICE CLEAT @ JOINT. SEE DETAILS B05.5 AND B05.6.
87. CLOSED CELL FOAM RUBBER CLOSURE-SIZE AS REQ'D FOR FRICTION FIT WITHIN EACH PANEL & SEAL.
111. 3" WIDE ST. STL. RETAINER CLEATS @ 18" O.C. WITH TWO FASTENERS EACH -FOLD UP IN FIELD TO SECURE FLASHING ABOVE.
122. ST. STL. ROOFING NAIL(S) PER FASTENER SCHEDULE.
123. #12# x 2" LONG "SCOTS" TYPE SCREW WITH NEOPRENE WASHER UNDER HEAD AT 12" O.C. MAX, (2 MIN PER SIDE).
133. EXISTING WOOD BLOCKING TO REMAIN, REPLACE ANY DETERIORATED MATERIAL PER THE UNIT PRICES.
134. EXIST. PLYWOOD TO REMAIN, REANCHOR TO WOOD FURRING WITH 10d RING SHANK NAILS @ 4" O.C. REPLACE DETERIORATED MAT'L. PER UNIT PRICES.
136. PACK VOID WITH NON-COMBUSTIBLE INSULATION.
168. MANUFACTURER APPROVED FABRIC REINFORCED LIQUID APPLIED FLASHING COMPOUND AT METAL-TO-MEMBRANE JOINT.

A. SOLDERED OR EPOXIED ONE-PIECE TERMINATION OR TRANSITION FABRICATION - CONFIGURE AS SHOWN.
B. HEAT WELD MEMBRANE PER MFR'S REQUIREMENTS.
C. FULLY ADHERE WITH MFR. APPROVED ADHESIVE.
D. FASTENERS WITH STRESS PLATE PER MFR'S. REQ'MTS.
E. TYP. SPLICE JOINT WITH CLEAT PER PROJECT DETAILS.
F. TYP. SPLICE JOINT WITH HEAT-WELDED MEMBRANE PER PROJECT DETAILS.
G. 1/2" MIN. HEMMED EDGE WITH CONTINUOUS SEALANT.
H. 1/4" DIA. ST. STL. SCREW W/ NEOPRENE BACKED METAL SEALING WASHERS @ 8" ON CENTER

A/R/C Associates Incorporated
Architecture
Roof Consulting
Construction Technology
LIC. NBR AAC000932
601 North Fern Creek Avenue
Suite 100 Orlando, FL 32803-4899
Tel. (407) 896-7875
Fax. (407) 898-6043

COPYRIGHT © 2020 A/R/C ASSOCIATES, INC.

--/--/--

JAMES W. RIPLEY AR-12758

REVISIONS		
NO.	DATE	BY:

SJCSB PROJECT NO: 2020-35

ROOF REPLACEMENT AT:
FIRST COAST TECHNICAL COLLEGE - BUILDINGS "B"
2980 COLLINS AVE. ST. AUGUSTINE, FL 32084
ST. JOHNS COUNTY SCHOOL DISTRICT

PERIMETER EDGE FLASHING DETAILS

JOB NO.:	20021.00
DRAWN BY:	JPP
CHECKED BY	JWR
DATE	11/06/20
SCALE:	1=1
PLOT SCALE:	AS NOTED

B02
SHEET NO.:
19072.00

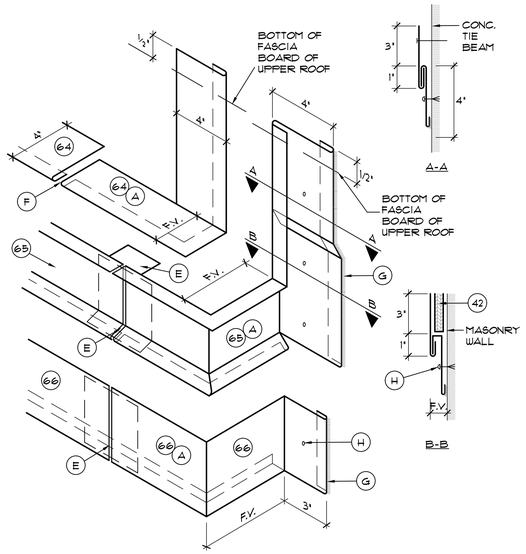

B03.1 EDGE METAL TERMINATION AT LOWER ROOF (AREA "B")

SCALE: NONE

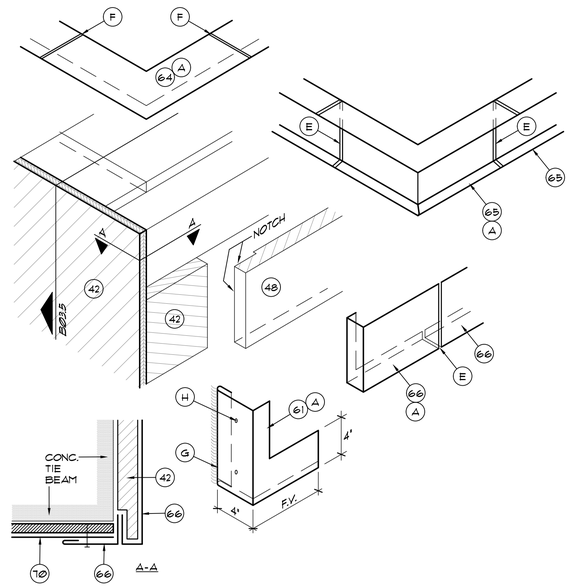

B03.2 EDGE METAL AND FASCIA FABRICATIONS AT CORNER

SCALE: NONE

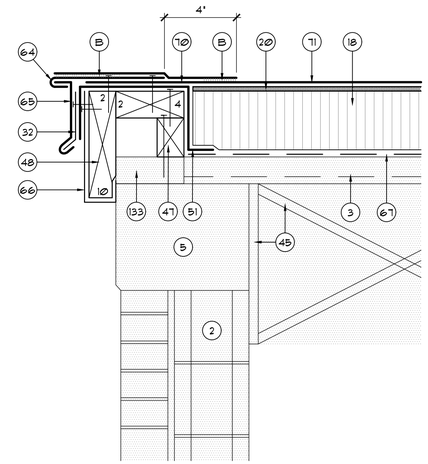

B03.3 NORTHEAST RAKE EDGE FLASHING DETAIL (AREA "A")

SCALE: 3" = 1'-0"

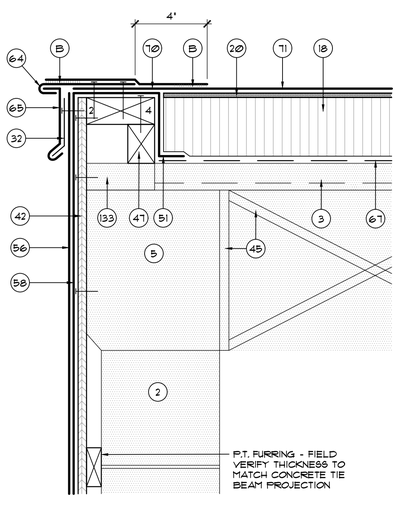

B03.4 TYP. RAKE EDGE FLASHING DETAIL AT ROOF AREA "A"

SCALE: 3" = 1'-0"

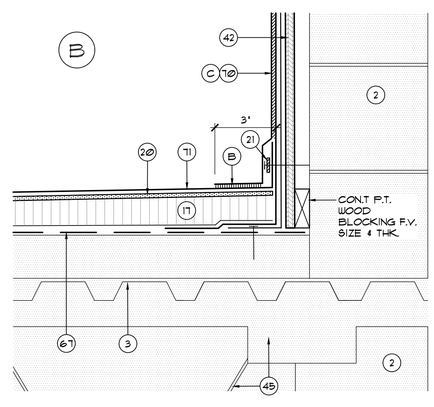

B03.5 NORTHEAST TRANSITION FLASHING DETAIL AT (AREA "B")

SCALE: 3" = 1'-0"

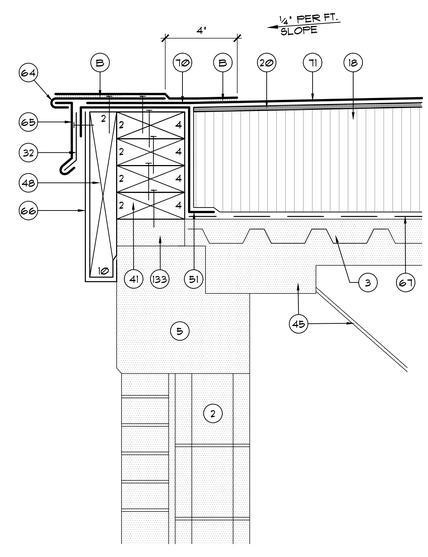

B03.6 DRIP EDGE FLASHING DETAIL AT NORTHEAST ROOF AREA "A"

SCALE: 3" = 1'-0"

DETAIL NOTES

2. EXISTING MASONRY CAVITY WALL TO REMAIN UNCHANGED.
3. EXISTING LIGHTWEIGHT CONCRETE WITH INTEGRAL EPS INSULATION OVER GALVANIZED STEEL DECK TO REMAIN UNCHANGED.
5. EXISTING CAST-IN-PLACE CONCRETE TIE BEAM TO REMAIN.
9. EXIST. MECHANICAL EQUIPMENT TO BE REUSED & REINSTALLED.
10. EXISTING CURB CONSTRUCTION TO REMAIN, MODIFY AS REQ'D AND AS DETAILED TO INCREASE FLASHING HEIGHT.
11. NEW METAL CURB ASSEMBLY WITH PRESSURE TREATED WOOD BLOCKING AND RIGID INSULATION, SEE DETAIL B08.4
17. NEW 1-1/2" THICK NON-TAPERED RIGID INSULATION IN FIELD.
18. NEW 1/8" PER FOOT TAPERED RIGID INSULATION WHERE INDICATED.
20. NEW 1/4" THICK PRIMED GYPSUM ROOF BOARD - FULLY PRIME.
21. ALUM. TERMINATION BAR, SET "TIGHT" TO ROOF, SEE DETAIL B04.1.
22. 24 GA. ST. STL. COUNTERFLASHING, SEE DETAIL B07.4
23. CONTINUOUS SEALANT - SEE SPECS FOR TYPE.
24. DOUBLE SIDED BUTYL FLASHING TAPE
32. CONT. CLEAT PER DETAIL NOTED - ANCHOR PER FASTENER SCHEDULE.
40. EXISTING PLUMBING VENT STACK TO REMAIN, EXTEND AS REQ'D FROM BELOW DECK OR WITH OMG "TUBOS"
41. NEW 2" THICK (NOM.) (U.N.O.) PRESSURE TREATED WOOD BLOCKING AT EDGE OF ROOF - ANCHOR PER FASTENER SCHEDULE.
42. 5/8" CDX PLYWOOD, ANCHOR AT 12" O.C. AT ALL EDGES, AND AS DEFINED BY FASTENER SCHEDULE
43. ROUND EDGE TO PROTECT MEMBRANE.
44. REMOVE EXISTING FASCIA BOARD AND REPLACE WITH NEW 1 x 8 PRESSURE TREATED FASCIA BOARD, NOTCH & RIP AS SHOWN, SECURE TO EXISTING FASCIA FRAMING.
45. EXISTING STRUCTURE AND/OR FRAMING TO REMAIN UNCHANGED.
46. CONTINUOUS WOOD OR PLYWOOD BLOCKING, FIELD VERIFY SEAM HEIGHT TO DETERMINE THICKNESS REQUIRED.
47. NEW 2" THICK P.T. WOOD BLOCKING, RIP AND TAPER TO MATCH NEW RIGID INSULATION -ANCHOR PER FASTENER SCHEDULE.
48. REMOVE EXIST. FASCIA BOARD AND REPLACE WITH NEW 2 x 10 P.T. FASCIA BD., NOTCH AS SHOWN, SECURE TO EXIST. CONSTRUCTION.
51. SELF-ADHESIVE MOD. BIT. UNDERLAYMENT / "DRY-IN" MEMBRANE.
61. 040" ALUM. PVC COATED EDGE METAL DECK FLANGE, "HOOK" TO TRANSITION FLASHING AND SECURE - SEE DETAIL B04.3.
62. PRE-FINISHED 040" ALUM. TRANSITION FLASHING - "HOOK" TO Z-CLOSURE & SECURE -SEE DETAIL B04.5.
63. PRE-FINISHED 040" ALUM. FASCIA CLADDING - "HOOK" TO WD. BLOCKING & SECURE -SEE DETAIL B05.2.
64. EDGE METAL PVC CLAD ALUM. DECK FLANGE -SEE DETAIL B02.2.
65. TWO-PIECE EDGE METAL ST. STL. FASCIA -SEE DETAIL B02.2.
66. ST. STL. FASCIA SKIRT, "HOOK" TO P.T. FASCIA BD. AND SECURE.
67. FIBERGLASS VENTED BASE SHEET -LOOSE LAID.
70. PVC THERMOPLASTIC SINGLE-PLY FLASHING MEMBRANE
71. PVC THERMOPLASTIC SINGLE-PLY ROOFING MEMBRANE.
73. PREFORMED PVC PIPE FLASHING "BOOT", HEAT WELD TO FIELD.
80. NEW PRE-FINISHED 040" ALUMINUM ROOF PANELS.
81. MFR'S. STD. ANCHOR CLIP - SCREW TO PLYWOOD DECK BELOW PER MFR'S RECOMMENDATIONS.
82. NEW PRE-FINISHED 050" ALUM. "Z-CLOSURE", SECURE OVER BUTYL TAPE AND SEAL - SEE DETAIL B03.4.
83. "BOX" TOP OF PANEL IN FIELD WITHOUT CUTTING.
84. NEW PRE-FINISHED 040" ALUM. DRIP EDGE FLASHING - OVERLAP FASCIA METAL & SECURE -SEE DETAIL B05.2.
86. METAL RIDGE CAP-SLIDE ON OVER "Z-CLOSURE" & SECURE WITH BUTTON PUNCH. PROVIDE SPLICE CLEAT @ JOINT. SEE DETAILS B05.5 AND B05.6.
87. CLOSED CELL FOAM RUBBER CLOSURE-SIZE AS REQ'D FOR FRICTION FIT WITHIN EACH PANEL & SEAL.
111. 3" WIDE ST. STL. RETAINER CLEATS @ 18" O.C. WITH TWO FASTENERS EACH -FOLD UP IN FIELD TO SECURE FLASHING ABOVE.
122. ST. STL. ROOFING NAIL(S) PER FASTENER SCHEDULE.
123. #12# x 2" LONG "SCOTS" TYPE SCREW WITH NEOPRENE WASHER UNDER HEAD AT 12" O.C. MAX, (2 MIN PER SIDE).
133. EXISTING WOOD BLOCKING TO REMAIN, REPLACE ANY DETERIORATED MATERIAL PER THE UNIT PRICES.
134. EXIST. PLYWOOD TO REMAIN, REANCHOR TO WOOD FURRING WITH 10d RING SHANK NAILS @ 4" O.C. REPLACE DETERIORATED MAT'L. PER UNIT PRICES.
136. PACK VOID WITH NON-COMBUSTIBLE INSULATION.
168. MANUFACTURER APPROVED FABRIC REINFORCED LIQUID APPLIED FLASHING COMPOUND AT METAL-TO-MEMBRANE JOINT.

A. SOLDERED OR EPOXIED ONE-PIECE TERMINATION OR TRANSITION FABRICATION - CONFIGURE AS SHOWN.
B. HEAT WELD MEMBRANE PER MFR'S REQUIREMENTS.
C. FULLY ADHERE WITH MFR. APPROVED ADHESIVE.
D. FASTENERS WITH STRESS PLATE PER MFR'S. REQ'MTS.
E. TYP. SPLICE JOINT WITH CLEAT PER PROJECT DETAILS.
F. TYP. SPLICE JOINT WITH HEAT-WELDED MEMBRANE PER PROJECT DETAILS.
G. 1/2" MIN. HEMMED EDGE WITH CONTINUOUS SEALANT.
H. 1/4" DIA. ST. STL. SCREW W/ NEOPRENE BACKED METAL SEALING WASHERS @ 8" ON CENTER

A/R/C Associates Incorporated
Architecture
Roof Consulting
Construction Technology
LIC. NBR AAC000932
601 North Fern Creek Avenue
Suite 100 Orlando, FL 32803-4899
Tel. (407) 896-7875
Fax. (407) 896-6043
COPYRIGHT © 2020 A/R/C ASSOCIATES, INC.

--/--/--

JAMES W. RIPLEY AR-12758

REVISIONS		
NO.	DATE	BY:

SJCSB PROJECT NO: 2020-35

ROOF REPLACEMENT AT:

FIRST COAST TECHNICAL COLLEGE - BUILDINGS "B"
2980 COLLINS AVE. ST. AUGUSTINE, FL 32084
ST. JOHNS COUNTY SCHOOL DISTRICT

ROOF EDGE DETAILS AND FABRICATIONS

JOB NO.:	20021.00
DRAWN BY:	JPP
CHECKED BY	JWR
DATE	11/06/20
SCALE:	1=1
PLOT SCALE:	AS NOTED

SHEET NO.: B03

19072.00

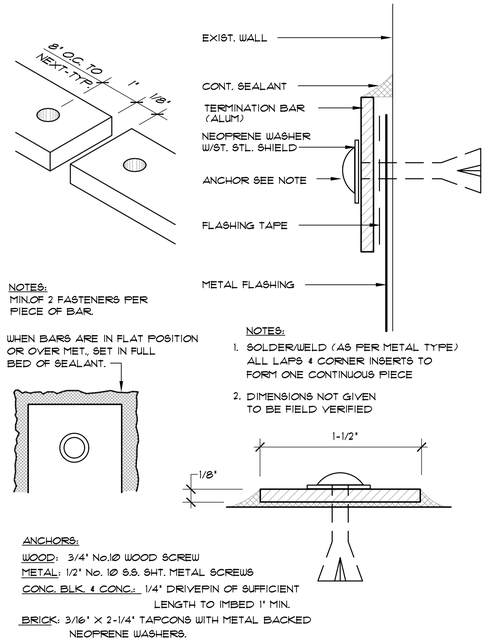

B04.1 TYP. TERMINATION BAR AND INSTALLATION DETAIL

SCALE: NONE

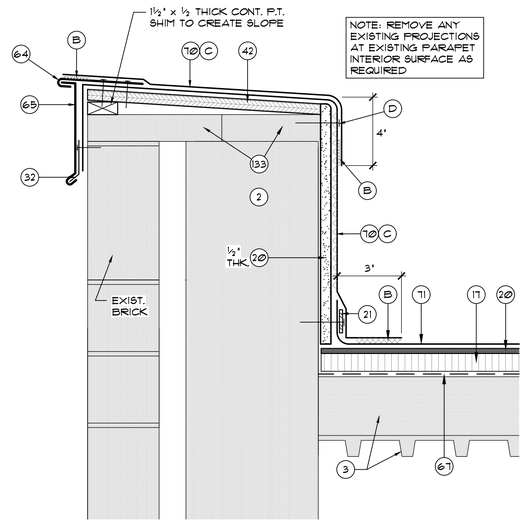

B04.2 TYP. PARAPET AND FLASHING DETAIL (AREA "C")

SCALE: 3" = 1'-0"

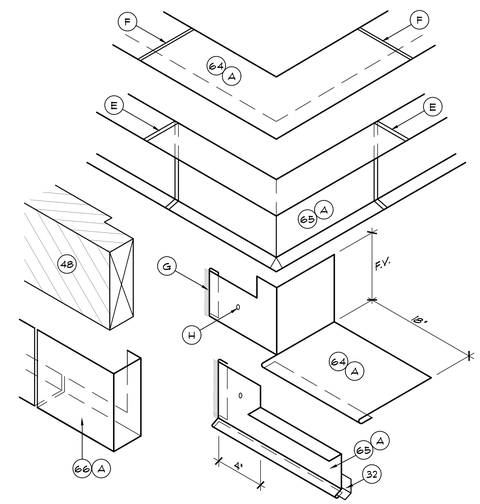

B04.3 PARAPET FLASHING TERMINATION DETAIL - ROOF AREA "C"

SCALE: NONE

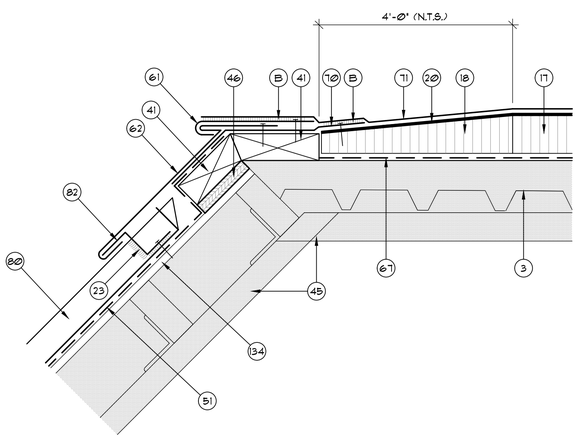

B04.4 ROOF AREA "B" EDGE DETAIL AT METAL MANSARD

SCALE: 3" = 1'-0"

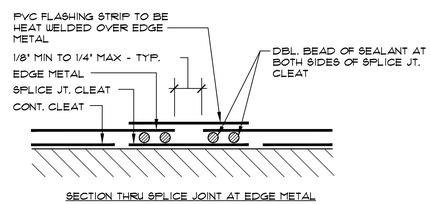

SECTION THRU SPLICE JOINT AT EDGE METAL

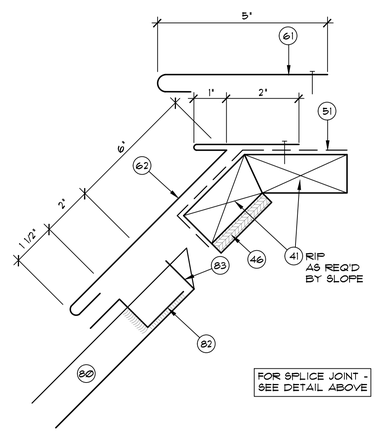

B04.5 ROOF AREA "B" EDGE METAL FABRICATION DETAIL

SCALE: NONE

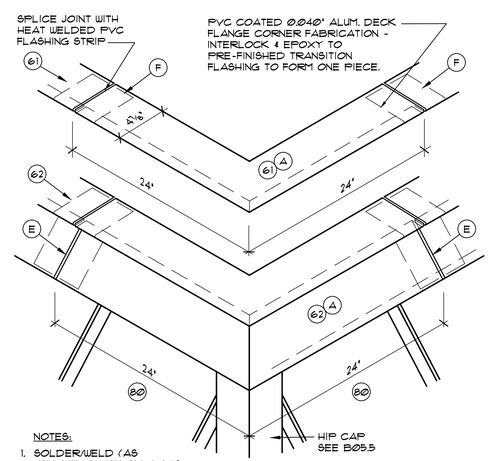

NOTES:
1. SOLDER/WELD (AS PER MTL. TYPE) ALL LAPS & CORNER INSERTS TO FORM ONE CONTINUOUS PIECE
2. DIMENSIONS NOT GIVEN TO BE FIELD VERIFIED

B04.6 TYP. EDGE METAL OUTSIDE CORNER FABRICATION

SCALE: NONE

DETAIL NOTES

2. EXISTING MASONRY CAVITY WALL TO REMAIN UNCHANGED.
3. EXISTING LIGHTWEIGHT CONCRETE WITH INTEGRAL EPS INSULATION OVER GALVANIZED STEEL DECK TO REMAIN UNCHANGED.
5. EXISTING CAST-IN-PLACE CONCRETE TIE BEAM TO REMAIN.
9. EXIST. MECHANICAL EQUIPMENT TO BE REUSED & REINSTALLED.
10. EXISTING CURB CONSTRUCTION TO REMAIN, MODIFY AS REQ'D AND AS DETAILED TO INCREASE FLASHING HEIGHT.
11. NEW METAL CURB ASSEMBLY WITH PRESSURE TREATED WOOD BLOCKING AND RIGID INSULATION, SEE DETAIL B08.4
17. NEW 1-1/2" THICK NON-TAPERED RIGID INSULATION IN FIELD.
18. NEW 1/8" PER FOOT TAPERED RIGID INSULATION WHERE INDICATED.
20. NEW 1/4" THICK PRIMED GYPSUM ROOF BOARD - FULLY PRIME.
21. ALUM. TERMINATION BAR, SET "TIGHT" TO ROOF, SEE DETAIL B04.1.
22. 24 GA. ST. STL. COUNTERFLASHING, SEE DETAIL B07.4
23. CONTINUOUS SEALANT - SEE SPECS FOR TYPE.
24. DOUBLE SIDED BUTYL FLASHING TAPE
32. CONT. CLEAT PER DETAIL NOTED - ANCHOR PER FASTENER SCHEDULE.
40. EXISTING PLUMBING VENT STACK TO REMAIN, EXTEND AS REQ'D FROM BELOW DECK OR WITH OMG "TUBOS"
41. NEW 2" THICK (NOM.) (U.N.O.) PRESSURE TREATED WOOD BLOCKING AT EDGE OF ROOF - ANCHOR PER FASTENER SCHEDULE.
42. 5/8" CDX PLYWOOD, ANCHOR AT 12" O.C. AT ALL EDGES, AND AS DEFINED BY FASTENER SCHEDULE
43. ROUND EDGE TO PROTECT MEMBRANE.
44. REMOVE EXISTING FASCIA BOARD AND REPLACE WITH NEW 1 x 8 PRESSURE TREATED FASCIA BOARD, NOTCH & RIP AS SHOWN, SECURE TO EXISTING FASCIA FRAMING.
45. EXISTING STRUCTURE AND/OR FRAMING TO REMAIN UNCHANGED.
46. CONTINUOUS WOOD OR PLYWOOD BLOCKING, FIELD VERIFY SEAM HEIGHT TO DETERMINE THICKNESS REQUIRED.
47. NEW 2" THICK P.T. WOOD BLOCKING, RIP AND TAPER TO MATCH NEW RIGID INSULATION -ANCHOR PER FASTENER SCHEDULE.
48. REMOVE EXIST. FASCIA BOARD AND REPLACE WITH NEW 2 x 10 P.T. FASCIA BD., NOTCH AS SHOWN, SECURE TO EXIST. CONSTRUCTION.
51. SELF-ADHESIVE MOD. BIT. UNDERLAYMENT / "DRY-IN" MEMBRANE.
61. 0.040" ALUM. PVC COATED EDGE METAL DECK FLANGE, "HOOK" TO TRANSITION FLASHING AND SECURE - SEE DETAIL B04.5.
62. PRE-FINISHED 0.040" ALUM. TRANSITION FLASHING - "HOOK" TO Z-CLOSURE & SECURE -SEE DETAIL B04.5.
63. PRE-FINISHED 0.040" ALUM. FASCIA CLADDING - "HOOK" TO WD. BLOCKING & SECURE -SEE DETAIL B05.2.
64. EDGE METAL PVC CLAD ALUM. DECK FLANGE -SEE DETAIL B02.2.
65. TWO-PIECE EDGE METAL ST. STL. FASCIA -SEE DETAIL B02.2.
66. ST. STL. FASCIA SKIRT, "HOOK" TO P.T. FASCIA BD. AND SECURE.
67. FIBERGLASS VENTED BASE SHEET -LOOSE LAID.
70. PVC THERMOPLASTIC SINGLE-PLY FLASHING MEMBRANE
71. PVC THERMOPLASTIC SINGLE-PLY ROOFING MEMBRANE.
73. PREFORMED PVC PIPE FLASHING "BOOT", HEAT WELD TO FIELD.
80. NEW PRE-FINISHED 0.040" ALUMINUM ROOF PANELS.
81. MFR'S. STD. ANCHOR CLIP - SCREW TO PLYWOOD DECK BELOW PER MFR'S RECOMMENDATIONS.
82. NEW PRE-FINISHED 0.050" ALUM. "Z-CLOSURE", SECURE OVER BUTYL TAPE AND SEAL - SEE DETAIL B03.4.
83. "BOX" TOP OF PANEL IN FIELD WITHOUT CUTTING.
84. NEW PRE-FINISHED 0.040" ALUM. DRIP EDGE FLASHING - OVERLAP FASCIA METAL & SECURE -SEE DETAIL B05.2.
86. METAL RIDGE CAP-SLIDE ON OVER "Z-CLOSURE" & SECURE WITH BUTTON PUNCH. PROVIDE SPLICE CLEAT @ JOINT. SEE DETAILS B05.5 AND B05.6.
87. CLOSED CELL FOAM RUBBER CLOSURE-SIZE AS REQ'D FOR FRICTION FIT WITHIN EACH PANEL & SEAL.
111. 3" WIDE ST. STL. RETAINER CLEATS @ 18" O.C. WITH TWO FASTENERS EACH -FOLD UP IN FIELD TO SECURE FLASHING ABOVE.
122. ST. STL. ROOFING NAIL(S) PER FASTENER SCHEDULE.
123. #12# x 2" LONG "SCOTS" TYPE SCREW WITH NEOPRENE WASHER UNDER HEAD AT 12" O.C. MAX, (2 MIN PER SIDE).
133. EXISTING WOOD BLOCKING TO REMAIN, REPLACE ANY DETERIORATED MATERIAL PER THE UNIT PRICES.
134. EXIST. PLYWOOD TO REMAIN, REANCHOR TO WOOD FURRING WITH 10d RING SHANK NAILS @ 4" O.C. REPLACE DETERIORATED MAT'L. PER UNIT PRICES.
136. PACK VOID WITH NON-COMBUSTIBLE INSULATION.
168. MANUFACTURER APPROVED FABRIC REINFORCED LIQUID APPLIED FLASHING COMPOUND AT METAL-TO-MEMBRANE JOINT.

A. SOLDERED OR EPOXIED ONE-PIECE TERMINATION OR TRANSITION FABRICATION - CONFIGURE AS SHOWN.
B. HEAT WELD MEMBRANE PER MFR'S REQUIREMENTS.
C. FULLY ADHERE WITH MFR. APPROVED ADHESIVE.
D. FASTENERS WITH STRESS PLATE PER MFR'S. REQ'MTS.
E. TYP. SPLICE JOINT WITH CLEAT PER PROJECT DETAILS.
F. TYP. SPLICE JOINT WITH HEAT-WELDED MEMBRANE PER PROJECT DETAILS.
G. 1/2" MIN. HEMMED EDGE WITH CONTINUOUS SEALANT.
H. 1/4" DIA. ST. STL. SCREW W/ NEOPRENE BACKED METAL SEALING WASHERS @ 8" ON CENTER

A/R/C Associates Incorporated
Architecture
Roof Consulting
Construction Technology
LIC. NBR AAC000932
601 North Fern Creek Avenue
Suite 100 Orlando, FL 32803-4899
Tel. (407) 896-7875
Fax. (407) 898-6043
COPYRIGHT © 2020 A/R/C ASSOCIATES, INC.

--/--/--

JAMES W. RIPLEY AR-12758

REVISIONS

NO.	DATE	BY:

SJCSB PROJECT NO: 2020-35

ROOF REPLACEMENT AT:
FIRST COAST TECHNICAL COLLEGE - BUILDINGS "B"
2980 COLLINS AVE. ST. AUGUSTINE, FL 32084
ST. JOHNS COUNTY SCHOOL DISTRICT

ROOF EDGE DETAILS AND FABRICATIONS

JOB NO.:	20021.00
DRAWN BY:	JPP
CHECKED BY	JWR
DATE	11/06/20
SCALE:	1=1
PLOT SCALE:	AS NOTED

B04

SHEET NO.: 19072.00

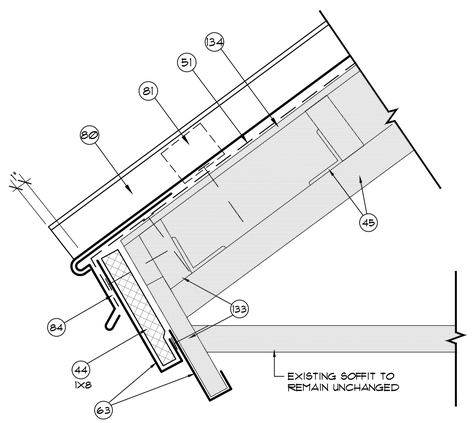

B05.1 METAL ROOF DRIP EDGE/FASCIA DETAIL

SCALE: 3" = 1'-0"

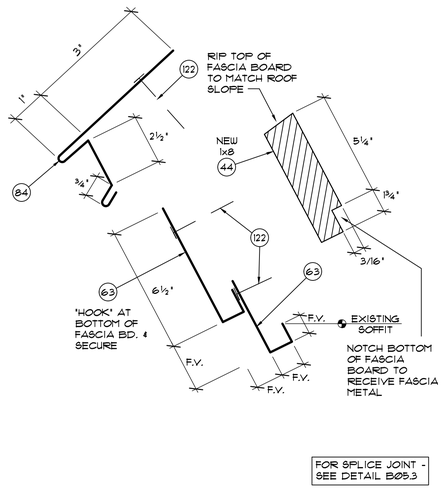

FOR SPLICE JOINT - SEE DETAIL B05.3

B05.2 METAL ROOF DRIP EDGE/ FASCIA FABRICATIONS

SCALE: NONE

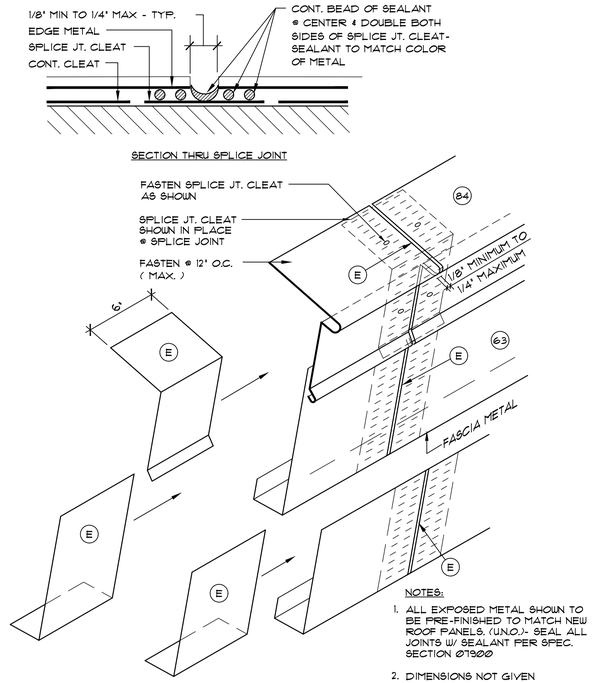

NOTES:

1. ALL EXPOSED METAL SHOWN TO BE PRE-FINISHED TO MATCH NEW ROOF PANELS. (U.N.O.)- SEAL ALL JOINTS W/ SEALANT PER SPEC. SECTION 07900
2. DIMENSIONS NOT GIVEN TO BE FIELD VERIFIED

B05.3 TYP. EDGE METAL SPLICE JOINT FABRICATION

SCALE: NONE

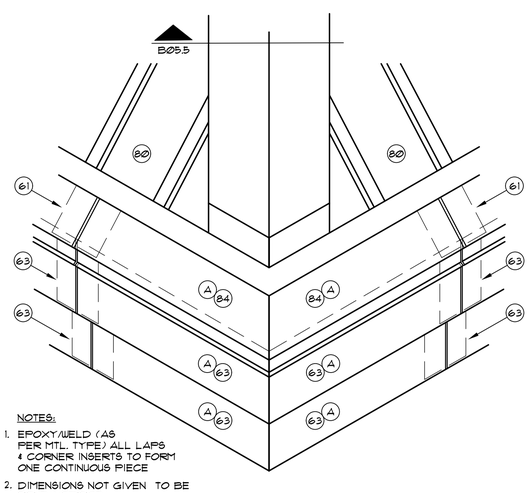

NOTES:

1. EPOXY/WELD (AS PER MTL. TYPE) ALL LAPS & CORNER INSERTS TO FORM ONE CONTINUOUS PIECE
2. DIMENSIONS NOT GIVEN TO BE FIELD VERIFIED

B05.4 METAL DRIP EDGE CORNER FABRICATION DETAILS

SCALE: NONE

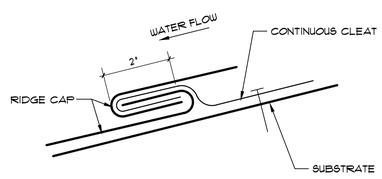

SECTION THRU LAP JOINT

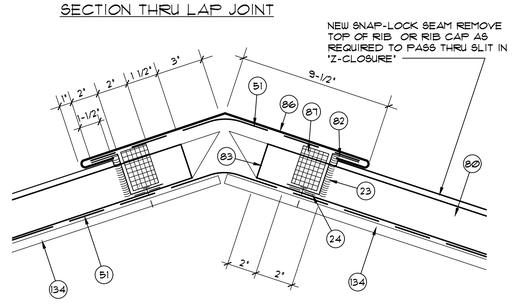

NOTES:

1. ADHERE W/ ADHESIVE) ALL LAPS & CORNER INSERTS TO FORM ONE CONTINUOUS PIECE
2. DIMENSIONS NOT GIVEN TO BE FIELD VERIFIED

B05.5 HIP CAP AND LAP JOINT FABRICATION DETAILS

SCALE: NONE

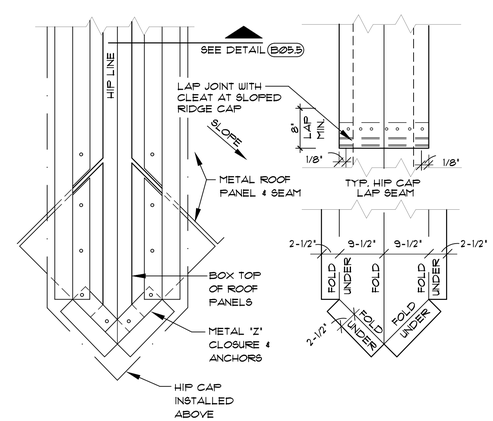

B05.6 HIP CAP FABRICATION

SCALE: NONE

DETAIL NOTES

2. EXISTING MASONRY CAVITY WALL TO REMAIN UNCHANGED.
3. EXISTING LIGHTWEIGHT CONCRETE WITH INTEGRAL EPS INSULATION OVER GALVANIZED STEEL DECK TO REMAIN UNCHANGED.
5. EXISTING CAST-IN-PLACE CONCRETE TIE BEAM TO REMAIN.
9. EXIST. MECHANICAL EQUIPMENT TO BE REUSED & REINSTALLED.
10. EXISTING CURB CONSTRUCTION TO REMAIN, MODIFY AS REQ'D AND AS DETAILED TO INCREASE FLASHING HEIGHT.
11. NEW METAL CURB ASSEMBLY WITH PRESSURE TREATED WOOD BLOCKING AND RIGID INSULATION, SEE DETAIL B08.4
17. NEW 1-1/2" THICK NON-TAPERED RIGID INSULATION IN FIELD.
18. NEW 1/8" PER FOOT TAPERED RIGID INSULATION WHERE INDICATED.
20. NEW 1/4" THICK PRIMED GYPSUM ROOF BOARD - FULLY PRIME.
21. ALUM. TERMINATION BAR, SET "TIGHT" TO ROOF, SEE DETAIL B04.1.
22. 24 GA. ST. STL. COUNTERFLASHING, SEE DETAIL B07.4
23. CONTINUOUS SEALANT - SEE SPECS FOR TYPE.
24. DOUBLE SIDED BUTYL FLASHING TAPE
32. CONT. CLEAT PER DETAIL NOTED - ANCHOR PER FASTENER SCHEDULE.
40. EXISTING PLUMBING VENT STACK TO REMAIN, EXTEND AS REQ'D FROM BELOW DECK OR WITH OMG "TUBOS"
41. NEW 2" THICK (NOM.) (U.N.O.) PRESSURE TREATED WOOD BLOCKING AT EDGE OF ROOF - ANCHOR PER FASTENER SCHEDULE.
42. 5/8" CDX PLYWOOD, ANCHOR AT 12" O.C. AT ALL EDGES, AND AS DEFINED BY FASTENER SCHEDULE
43. ROUND EDGE TO PROTECT MEMBRANE.
44. REMOVE EXISTING FASCIA BOARD AND REPLACE WITH NEW 1 x 8 PRESSURE TREATED FASCIA BOARD, NOTCH & RIP AS SHOWN, SECURE TO EXISTING FASCIA FRAMING.
45. EXISTING STRUCTURE AND/OR FRAMING TO REMAIN UNCHANGED.
46. CONTINUOUS WOOD OR PLYWOOD BLOCKING, FIELD VERIFY SEAM HEIGHT TO DETERMINE THICKNESS REQUIRED.
47. NEW 2" THICK P.T. WOOD BLOCKING, RIP AND TAPER TO MATCH NEW RIGID INSULATION -ANCHOR PER FASTENER SCHEDULE.
48. REMOVE EXIST. FASCIA BOARD AND REPLACE WITH NEW 2 x 10 P.T. FASCIA BD., NOTCH AS SHOWN, SECURE TO EXIST. CONSTRUCTION.
51. SELF-ADHESIVE MOD. BIT. UNDERLAYMENT / "DRY-IN" MEMBRANE.
61. 0.040" ALUM. PVC COATED EDGE METAL DECK FLANGE, "HOOK" TO TRANSITION FLASHING AND SECURE - SEE DETAIL B04.3.
62. PRE-FINISHED 0.040" ALUM. TRANSITION FLASHING - "HOOK" TO Z-CLOSURE & SECURE -SEE DETAIL B04.5.
63. PRE-FINISHED 0.040" ALUM. FASCIA CLADDING - "HOOK" TO WD. BLOCKING & SECURE -SEE DETAIL B05.2.
64. EDGE METAL PVC CLAD ALUM. DECK FLANGE -SEE DETAIL B02.2.
65. TWO-PIECE EDGE METAL ST. STL. FASCIA -SEE DETAIL B02.2.
66. ST. STL. FASCIA SKIRT, "HOOK" TO P.T. FASCIA BD. AND SECURE.
67. FIBERGLASS VENTED BASE SHEET -LOOSE LAID.
70. PVC THERMOPLASTIC SINGLE-PLY FLASHING MEMBRANE
71. PVC THERMOPLASTIC SINGLE-PLY ROOFING MEMBRANE.
73. PREFORMED PVC PIPE FLASHING "BOOT", HEAT WELD TO FIELD.
80. NEW PRE-FINISHED 0.040" ALUMINUM ROOF PANELS.
81. MFR'S. STD. ANCHOR CLIP - SCREW TO PLYWOOD DECK BELOW PER MFR'S RECOMMENDATIONS.
82. NEW PRE-FINISHED 0.050" ALUM. "Z-CLOSURE", SECURE OVER BUTYL TAPE AND SEAL - SEE DETAIL B03.4.
83. "BOX" TOP OF PANEL IN FIELD WITHOUT CUTTING.
84. NEW PRE-FINISHED 0.040" ALUM. DRIP EDGE FLASHING - OVERLAP FASCIA METAL & SECURE -SEE DETAIL B05.2.
86. METAL RIDGE CAP-SLIDE ON OVER "Z-CLOSURE" & SECURE WITH BUTTON PUNCH. PROVIDE SPLICE CLEAT @ JOINT. SEE DETAILS B05.5 AND B05.6.
87. CLOSED CELL FOAM RUBBER CLOSURE-SIZE AS REQ'D FOR FRICTION FIT WITHIN EACH PANEL & SEAL.
111. 3" WIDE ST. STL. RETAINER CLEATS @ 18" O.C. WITH TWO FASTENERS EACH -FOLD UP IN FIELD TO SECURE FLASHING ABOVE.
122. ST. STL. ROOFING NAIL(S) PER FASTENER SCHEDULE.
123. #12# x 2" LONG "SCOTS" TYPE SCREW WITH NEOPRENE WASHER UNDER HEAD AT 12" O.C. MAX, (2 MIN PER SIDE).
133. EXISTING WOOD BLOCKING TO REMAIN, REPLACE ANY DETERIORATED MATERIAL PER THE UNIT PRICES.
134. EXIST. PLYWOOD TO REMAIN, REANCHOR TO WOOD FURRING WITH 10d RING SHANK NAILS @ 4" O.C. REPLACE DETERIORATED MAT'L. PER UNIT PRICES.
136. PACK VOID WITH NON-COMBUSTIBLE INSULATION.
168. MANUFACTURER APPROVED FABRIC REINFORCED LIQUID APPLIED FLASHING COMPOUND AT METAL-TO-MEMBRANE JOINT.

A. SOLDERED OR EPOXIED ONE-PIECE TERMINATION OR TRANSITION FABRICATION - CONFIGURE AS SHOWN.
B. HEAT WELD MEMBRANE PER MFR'S REQUIREMENTS.
C. FULLY ADHERE WITH MFR. APPROVED ADHESIVE.
D. FASTENERS WITH STRESS PLATE PER MFR'S. REQ'MTS.
E. TYP. SPLICE JOINT WITH CLEAT PER PROJECT DETAILS.
F. TYP. SPLICE JOINT WITH HEAT-WELDED MEMBRANE PER PROJECT DETAILS.
G. 1/2" MIN. HEMMED EDGE WITH CONTINUOUS SEALANT.
H. 1/4" DIA. ST. STL. SCREW W/ NEOPRENE BACKED METAL SEALING WASHERS @ 8" ON CENTER

A/R/C Associates Incorporated
Architecture
Roof Consulting
Construction Technology
LIC. NBR AAC000932
601 North Fern Creek Avenue
Suite 100 Orlando, FL 32803-4899
Tel. (407) 896-7875
Fax. (407) 898-6043

COPYRIGHT © 2020 A/R/C ASSOCIATES, INC.

--/--/--

JAMES W. RIPLEY AR-12758

REVISIONS		
NO.	DATE	BY:

SJCSB PROJECT NO: 2020-35

ROOF REPLACEMENT AT:

FIRST COAST TECHNICAL COLLEGE - BUILDINGS "B"
2980 COLLINS AVE. ST. AUGUSTINE, FL 32084
ST. JOHNS COUNTY SCHOOL DISTRICT

METAL ROOF FABRICATION DETAILS

JOB NO.:	20021.00
DRAWN BY:	JPP
CHECKED BY	JWR
DATE	11/06/20
SCALE:	1=1
PLOT SCALE:	AS NOTED

B05

SHEET NO.: 19072.00

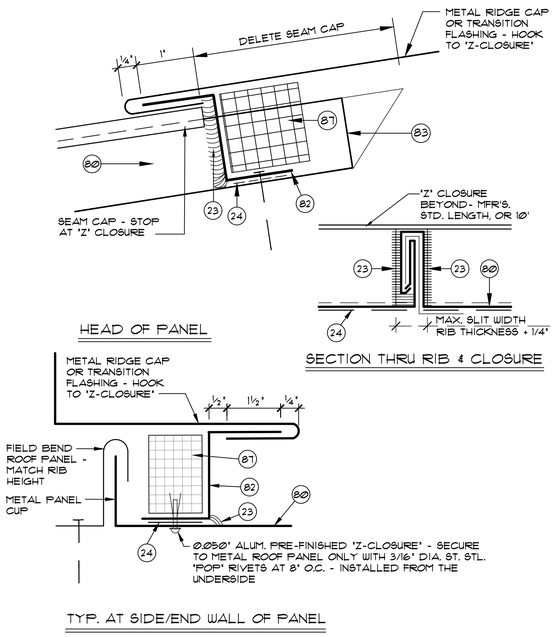

B06.1 TYP. METAL PANEL FABRICATION DETAILS

SCALE: NONE

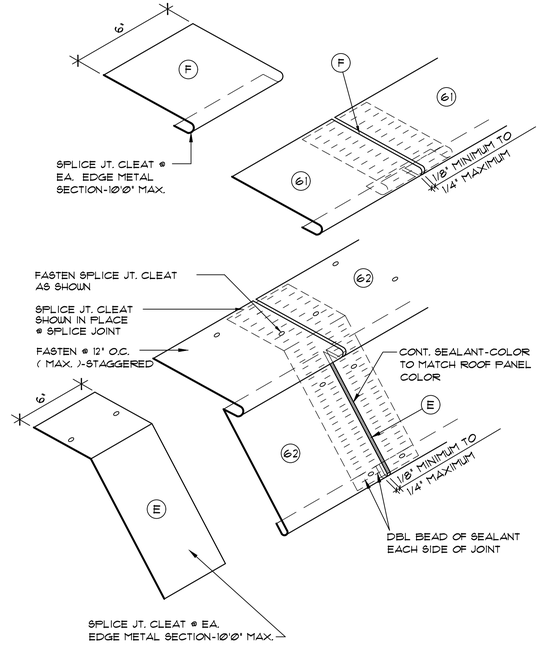

B06.2 TYP. SPLICE JOINTS AT TRANSITION FLASHING

SCALE: NONE

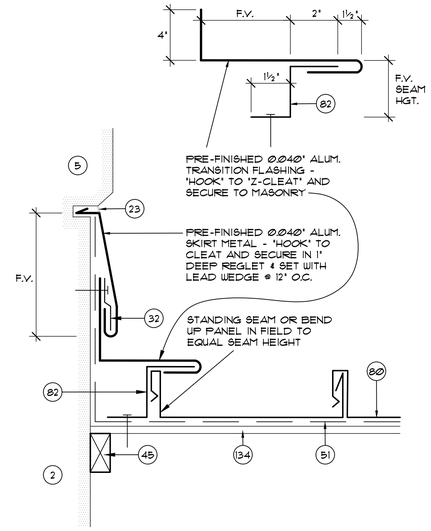

B06.3 RAKE EDGE TRANSITION FLASHING DETAIL AT METAL MANSARD ROOF

SCALE: 3" = 1'-0"

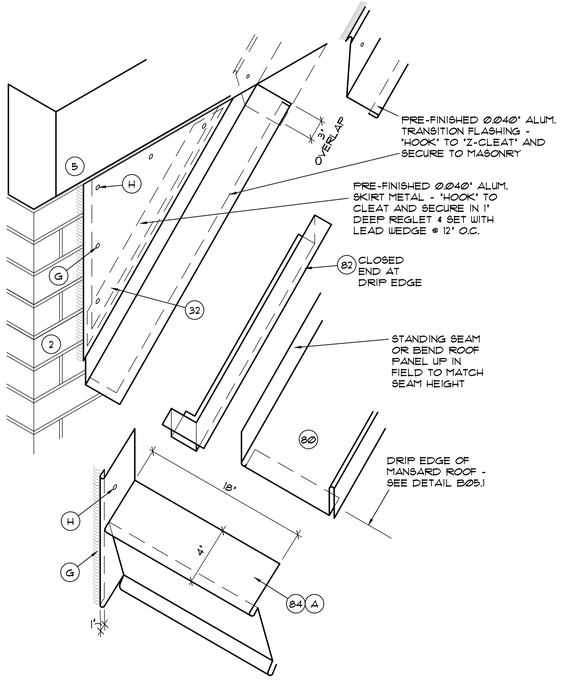

B06.4 LOWER METAL ROOF FLASHING AT TRANSITION WALL

SCALE: NONE

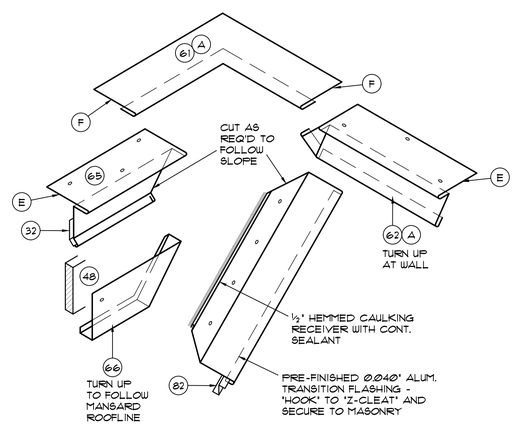

B06.5 UPPER METAL ROOF FLASHING AT TRANSITION WALL

SCALE: NONE

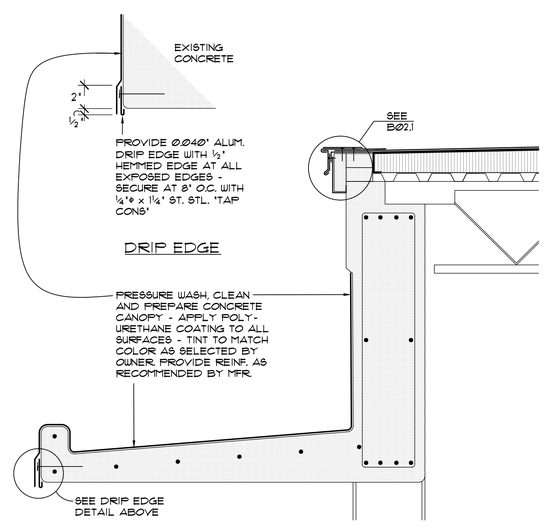

B06.6 LIQUID APPLIED ROOFING AT EXISTING CONCRETE CANOPIES

SCALE: NONE

DETAIL NOTES

2. EXISTING MASONRY CAVITY WALL TO REMAIN UNCHANGED.
3. EXISTING LIGHTWEIGHT CONCRETE WITH INTEGRAL EPS INSULATION OVER GALVANIZED STEEL DECK TO REMAIN UNCHANGED.
5. EXISTING CAST-IN-PLACE CONCRETE TIE BEAM TO REMAIN.
9. EXIST. MECHANICAL EQUIPMENT TO BE REUSED & REINSTALLED.
10. EXISTING CURB CONSTRUCTION TO REMAIN, MODIFY AS REQ'D AND AS DETAILED TO INCREASE FLASHING HEIGHT.
11. NEW METAL CURB ASSEMBLY WITH PRESSURE TREATED WOOD BLOCKING AND RIGID INSULATION, SEE DETAIL B08.4
17. NEW 1-1/2" THICK NON-TAPERED RIGID INSULATION IN FIELD.
18. NEW 1/8" PER FOOT TAPERED RIGID INSULATION WHERE INDICATED.
20. NEW 1/4" THICK PRIMED GYPSUM ROOF BOARD - FULLY PRIME.
21. ALUM. TERMINATION BAR, SET "TIGHT" TO ROOF, SEE DETAIL B04.1.
22. 24 GA. ST. STL. COUNTERFLASHING, SEE DETAIL B07.4
23. CONTINUOUS SEALANT - SEE SPECS FOR TYPE.
24. DOUBLE SIDED BUTYL FLASHING TAPE
32. CONT. CLEAT PER DETAIL NOTED - ANCHOR PER FASTENER SCHEDULE.
40. EXISTING PLUMBING VENT STACK TO REMAIN, EXTEND AS REQ'D FROM BELOW DECK OR WITH OMG "TUBOS"
41. NEW 2" THICK (NOM.) (U.N.O.) PRESSURE TREATED WOOD BLOCKING AT EDGE OF ROOF - ANCHOR PER FASTENER SCHEDULE.
42. 5/8" CDX PLYWOOD, ANCHOR AT 12" O.C. AT ALL EDGES, AND AS DEFINED BY FASTENER SCHEDULE
43. ROUND EDGE TO PROTECT MEMBRANE.
44. REMOVE EXISTING FASCIA BOARD AND REPLACE WITH NEW 1 x 8 PRESSURE TREATED FASCIA BOARD, NOTCH & RIP AS SHOWN, SECURE TO EXISTING FASCIA FRAMING.
45. EXISTING STRUCTURE AND/OR FRAMING TO REMAIN UNCHANGED.
46. CONTINUOUS WOOD OR PLYWOOD BLOCKING, FIELD VERIFY SEAM HEIGHT TO DETERMINE THICKNESS REQUIRED.
47. NEW 2" THICK P.T. WOOD BLOCKING, RIP AND TAPER TO MATCH NEW RIGID INSULATION -ANCHOR PER FASTENER SCHEDULE.
48. REMOVE EXIST. FASCIA BOARD AND REPLACE WITH NEW 2 x 10 P.T. FASCIA BD., NOTCH AS SHOWN, SECURE TO EXIST. CONSTRUCTION.
51. SELF-ADHESIVE MOD. BIT. UNDERLAYMENT / "DRY-IN" MEMBRANE.
61. 0.040" ALUM. PVC COATED EDGE METAL DECK FLANGE, "HOOK" TO TRANSITION FLASHING AND SECURE - SEE DETAIL B04.5.
62. PRE-FINISHED 0.040" ALUM. TRANSITION FLASHING - "HOOK" TO Z-CLOSURE & SECURE -SEE DETAIL B04.5.
63. PRE-FINISHED 0.040" ALUM. FASCIA CLADDING - "HOOK" TO WD. BLOCKING & SECURE -SEE DETAIL B05.2.
64. EDGE METAL PVC CLAD ALUM. DECK FLANGE -SEE DETAIL B02.2.
65. TWO-PIECE EDGE METAL ST. STL. FASCIA -SEE DETAIL B02.2.
66. ST. STL. FASCIA SKIRT, "HOOK" TO P.T. FASCIA BD. AND SECURE.
67. FIBERGLASS VENTED BASE SHEET -LOOSE LAID.
70. PVC THERMOPLASTIC SINGLE-PLY FLASHING MEMBRANE
71. PVC THERMOPLASTIC SINGLE-PLY ROOFING MEMBRANE.
73. PREFORMED PVC PIPE FLASHING "BOOT", HEAT WELD TO FIELD.
80. NEW PRE-FINISHED 0.040" ALUMINUM ROOF PANELS.
81. MFR'S. STD. ANCHOR CLIP - SCREW TO PLYWOOD DECK BELOW PER MFR'S RECOMMENDATIONS.
82. NEW PRE-FINISHED 0.050" ALUM. "Z-CLOSURE", SECURE OVER BUTYL TAPE AND SEAL - SEE DETAIL B03.4.
83. "BOX" TOP OF PANEL IN FIELD WITHOUT CUTTING.
84. NEW PRE-FINISHED 0.040" ALUM. DRIP EDGE FLASHING - OVERLAP FASCIA METAL & SECURE -SEE DETAIL B05.2.
86. METAL RIDGE CAP-SLIDE ON OVER "Z-CLOSURE" & SECURE WITH BUTTON PUNCH. PROVIDE SPLICE CLEAT @ JOINT. SEE DETAILS B05.5 AND B05.6.
87. CLOSED CELL FOAM RUBBER CLOSURE-SIZE AS REQ'D FOR FRICTION FIT WITHIN EACH PANEL & SEAL.
111. 3" WIDE ST. STL. RETAINER CLEATS @ 18" O.C. WITH TWO FASTENERS EACH -FOLD UP IN FIELD TO SECURE FLASHING ABOVE.
122. ST. STL. ROOFING NAIL(S) PER FASTENER SCHEDULE.
123. #12# x 2" LONG "SCOTS" TYPE SCREW WITH NEOPRENE WASHER UNDER HEAD AT 12" O.C. MAX, (2 MIN PER SIDE).
133. EXISTING WOOD BLOCKING TO REMAIN, REPLACE ANY DETERIORATED MATERIAL PER THE UNIT PRICES.
134. EXIST. PLYWOOD TO REMAIN, REANCHOR TO WOOD FURRING WITH 10d RING SHANK NAILS @ 4" O.C. REPLACE DETERIORATED MAT'L. PER UNIT PRICES.
136. PACK VOID WITH NON-COMBUSTIBLE INSULATION.
168. MANUFACTURER APPROVED FABRIC REINFORCED LIQUID APPLIED FLASHING COMPOUND AT METAL-TO-MEMBRANE JOINT.

A. SOLDERED OR EPOXIED ONE-PIECE TERMINATION OR TRANSITION FABRICATION - CONFIGURE AS SHOWN.
B. HEAT WELD MEMBRANE PER MFR'S REQUIREMENTS.
C. FULLY ADHERE WITH MFR. APPROVED ADHESIVE.
D. FASTENERS WITH STRESS PLATE PER MFR'S. REQ'MTS.
E. TYP. SPLICE JOINT WITH CLEAT PER PROJECT DETAILS.
F. TYP. SPLICE JOINT WITH HEAT-WELDED MEMBRANE PER PROJECT DETAILS.
G. 1/2" MIN. HEMMED EDGE WITH CONTINUOUS SEALANT.
H. 1/4" DIA. ST. STL. SCREW W/ NEOPRENE BACKED METAL SEALING WASHERS @ 8" ON CENTER

A/R/C Associates Incorporated
Architecture
Roof Consulting
Construction Technology
LIC. NBR AAC000932
601 North Fern Creek Avenue
Suite 100 Orlando, FL 32803-4899
Tel. (407) 896-7875
Fax. (407) 898-6043

COPYRIGHT © 2020 A/R/C ASSOCIATES, INC.

--/--/--

JAMES W. RIPLEY AR-12758

REVISIONS		
NO.	DATE	BY:

SJCSB PROJECT NO: 2020-35

ROOF REPLACEMENT AT:

FIRST COAST TECHNICAL COLLEGE - BUILDINGS "B"
2980 COLLINS AVE. ST. AUGUSTINE, FL 32084
ST. JOHNS COUNTY SCHOOL DISTRICT

METAL ROOF FLASHING DETAILS

JOB NO.:	20021.00
DRAWN BY:	JPP
CHECKED BY	JWR
DATE	11/06/20
SCALE:	1=1
PLOT SCALE:	AS NOTED

B06

SHEET NO.: 19072.00

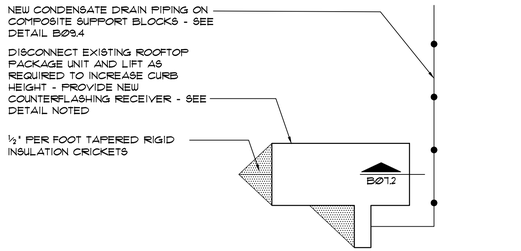

PLAN - ROOF AREA "A"

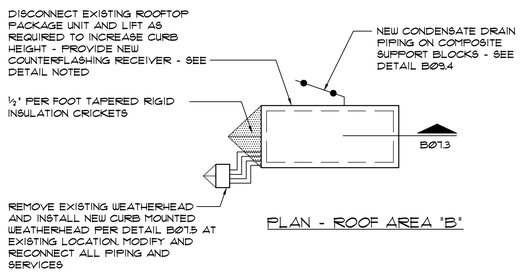

PLAN - ROOF AREA "B"

B07.1 SCOPE OF WORK PLANS FOR LARGE A/C UNITS

SCALE: NONE

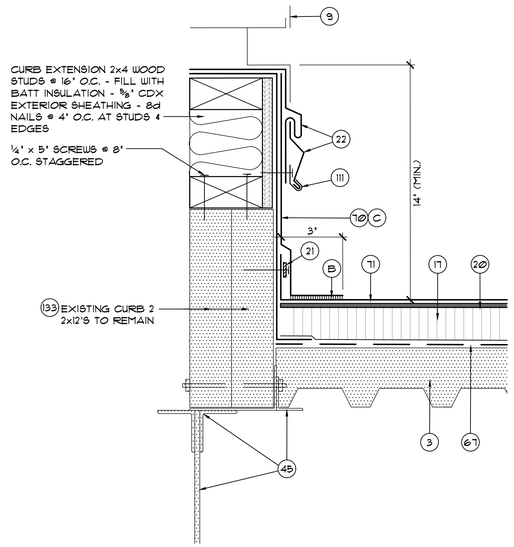

B07.2 LARGE A/C UNIT CURB AND FLASHING DETAIL (AREA "A")

SCALE: 3" = 1'-0"

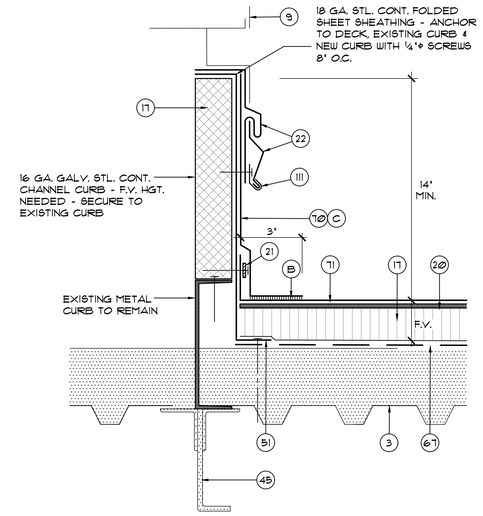

B07.3 LARGE A/C UNIT CURB AND FLASHING DETAIL (AREA "B")

SCALE: 3" = 1'-0"

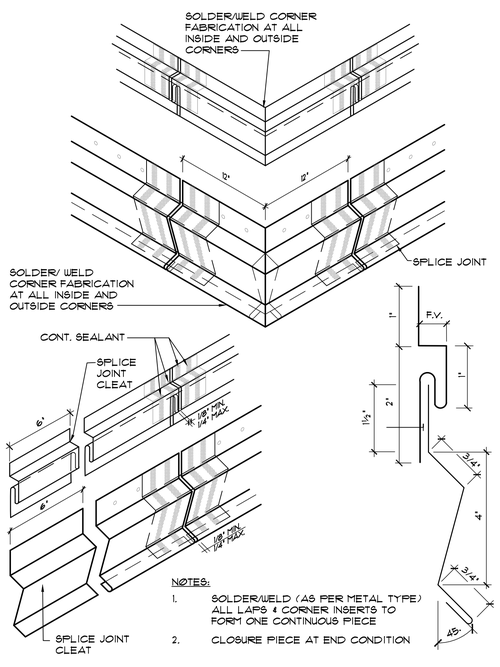

B07.4 TYP. COUNTERFLASHING FABRICATION DETAIL

SCALE: 3" = 1'-0"

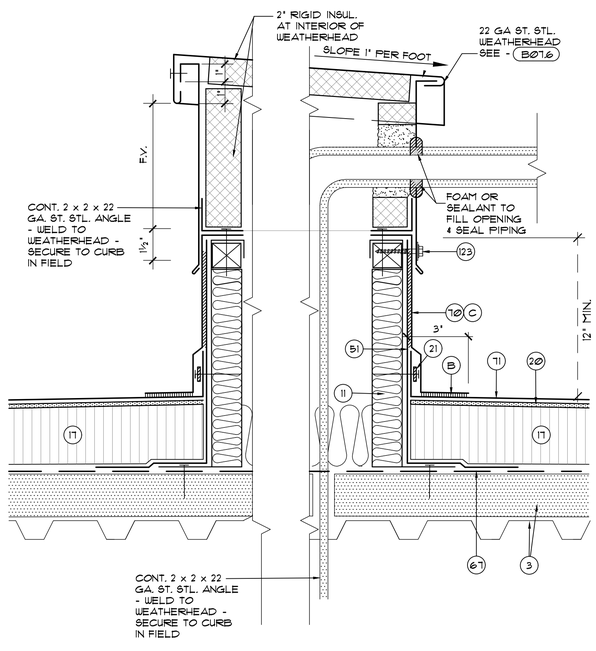

B07.5 WEATHERHEAD CURB AND FLASHING DETAIL

SCALE: 3" = 1'-0"

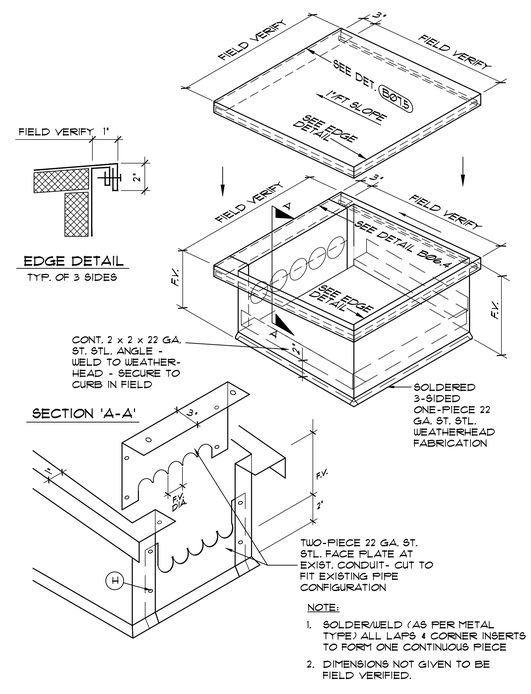

B07.6 WEATHERHEAD FABRICATION DETAIL

SCALE: 3" = 1'-0"

DETAIL NOTES

2. EXISTING MASONRY CAVITY WALL TO REMAIN UNCHANGED.
3. EXISTING LIGHTWEIGHT CONCRETE WITH INTEGRAL EPS INSULATION OVER GALVANIZED STEEL DECK TO REMAIN UNCHANGED.
5. EXISTING CAST-IN-PLACE CONCRETE TIE BEAM TO REMAIN.
9. EXIST. MECHANICAL EQUIPMENT TO BE REUSED & REINSTALLED.
10. EXISTING CURB CONSTRUCTION TO REMAIN, MODIFY AS REQ'D AND AS DETAILED TO INCREASE FLASHING HEIGHT.
11. NEW METAL CURB ASSEMBLY WITH PRESSURE TREATED WOOD BLOCKING AND RIGID INSULATION, SEE DETAIL B08.4
17. NEW 1-1/2" THICK NON-TAPERED RIGID INSULATION IN FIELD.
18. NEW 1/8" PER FOOT TAPERED RIGID INSULATION WHERE INDICATED.
20. NEW 1/4" THICK PRIMED GYPSUM ROOF BOARD - FULLY PRIME.
21. ALUM. TERMINATION BAR, SET "TIGHT" TO ROOF, SEE DETAIL B04.1.
22. 24 GA. ST. STL. COUNTERFLASHING, SEE DETAIL B07.4
23. CONTINUOUS SEALANT - SEE SPECS FOR TYPE.
24. DOUBLE SIDED BUTYL FLASHING TAPE
32. CONT. CLEAT PER DETAIL NOTED - ANCHOR PER FASTENER SCHEDULE.
40. EXISTING PLUMBING VENT STACK TO REMAIN, EXTEND AS REQ'D FROM BELOW DECK OR WITH OMG "TUBOS"
41. NEW 2" THICK (NOM.) (U.N.O.) PRESSURE TREATED WOOD BLOCKING AT EDGE OF ROOF - ANCHOR PER FASTENER SCHEDULE.
42. 5/8" CDX PLYWOOD, ANCHOR AT 12" O.C. AT ALL EDGES, AND AS DEFINED BY FASTENER SCHEDULE
43. ROUND EDGE TO PROTECT MEMBRANE.
44. REMOVE EXISTING FASCIA BOARD AND REPLACE WITH NEW 1 x 8 PRESSURE TREATED FASCIA BOARD, NOTCH & RIP AS SHOWN, SECURE TO EXISTING FASCIA FRAMING.
45. EXISTING STRUCTURE AND/OR FRAMING TO REMAIN UNCHANGED.
46. CONTINUOUS WOOD OR PLYWOOD BLOCKING, FIELD VERIFY SEAM HEIGHT TO DETERMINE THICKNESS REQUIRED.
47. NEW 2" THICK P.T. WOOD BLOCKING, RIP AND TAPER TO MATCH NEW RIGID INSULATION -ANCHOR PER FASTENER SCHEDULE.
48. REMOVE EXIST. FASCIA BOARD AND REPLACE WITH NEW 2 x 10 P.T. FASCIA BD., NOTCH AS SHOWN, SECURE TO EXIST. CONSTRUCTION.
51. SELF-ADHESIVE MOD. BIT. UNDERLAYMENT / "DRY-IN" MEMBRANE.
61. Ø.040" ALUM. PVC COATED EDGE METAL DECK FLANGE, "HOOK" TO TRANSITION FLASHING AND SECURE - SEE DETAIL B04.5.
62. PRE-FINISHED Ø.040" ALUM. TRANSITION FLASHING - "HOOK" TO Z-CLOSURE & SECURE -SEE DETAIL B04.5.
63. PRE-FINISHED Ø.040" ALUM. FASCIA CLADDING - "HOOK" TO WD. BLOCKING & SECURE -SEE DETAIL B09.2.
64. EDGE METAL PVC CLAD ALUM. DECK FLANGE -SEE DETAIL B02.2.
65. TWO-PIECE EDGE METAL ST. STL. FASCIA -SEE DETAIL B02.2.
66. ST. STL. FASCIA SKIRT, "HOOK" TO P.T. FASCIA BD. AND SECURE.
67. FIBERGLASS VENTED BASE SHEET -LOOSE LAID.
70. PVC THERMOPLASTIC SINGLE-PLY FLASHING MEMBRANE
71. PVC THERMOPLASTIC SINGLE-PLY ROOFING MEMBRANE.
73. PREFORMED PVC PIPE FLASHING "BOOT", HEAT WELD TO FIELD.
80. NEW PRE-FINISHED Ø.040" ALUMINUM ROOF PANELS.
81. MFR'S. STD. ANCHOR CLIP - SCREW TO PLYWOOD DECK BELOW PER MFR'S RECOMMENDATIONS.
82. NEW PRE-FINISHED Ø.050" ALUM. "Z-CLOSURE", SECURE OVER BUTYL TAPE AND SEAL - SEE DETAIL B03.4.
83. "BOX" TOP OF PANEL IN FIELD WITHOUT CUTTING.
84. NEW PRE-FINISHED Ø.040" ALUM. DRIP EDGE FLASHING - OVERLAP FASCIA METAL & SECURE -SEE DETAIL B09.2.
86. METAL RIDGE CAP-SLIDE ON OVER "Z-CLOSURE" & SECURE WITH BUTTON PUNCH. PROVIDE SPLICE CLEAT @ JOINT. SEE DETAILS B09.5 AND B09.6.
87. CLOSED CELL FOAM RUBBER CLOSURE-SIZE AS REQ'D FOR FRICTION FIT WITHIN EACH PANEL & SEAL.
111. 3" WIDE ST. STL. RETAINER CLEATS @ 18" O.C. WITH TWO FASTENERS EACH -FOLD UP IN FIELD TO SECURE FLASHING ABOVE.
122. ST. STL. ROOFING NAIL(S) PER FASTENER SCHEDULE.
123. #12# x 2" LONG "SCOTS" TYPE SCREW WITH NEOPRENE WASHER UNDER HEAD AT 12" O.C. MAX, (2 MIN PER SIDE).
133. EXISTING WOOD BLOCKING TO REMAIN, REPLACE ANY DETERIORATED MATERIAL PER THE UNIT PRICES.
134. EXIST. PLYWOOD TO REMAIN, REANCHOR TO WOOD FURRING WITH 10d RING SHANK NAILS @ 4" O.C. REPLACE DETERIORATED MAT'L. PER UNIT PRICES.
136. PACK VOID WITH NON-COMBUSTIBLE INSULATION.
168. MANUFACTURER APPROVED FABRIC REINFORCED LIQUID APPLIED FLASHING COMPOUND AT METAL-TO-MEMBRANE JOINT.

A. SOLDERED OR EPOXIED ONE-PIECE TERMINATION OR TRANSITION FABRICATION - CONFIGURE AS SHOWN.
B. HEAT WELD MEMBRANE PER MFR'S REQUIREMENTS.
C. FULLY ADHERE WITH MFR. APPROVED ADHESIVE.
D. FASTENERS WITH STRESS PLATE PER MFR'S. REQ'MTS.
E. TYP. SPLICE JOINT WITH CLEAT PER PROJECT DETAILS.
F. TYP. SPLICE JOINT WITH HEAT-WELDED MEMBRANE PER PROJECT DETAILS.
G. 1/2" MIN. HEMMED EDGE WITH CONTINUOUS SEALANT.
H. 1/4" DIA. ST. STL. SCREW W/ NEOPRENE BACKED METAL SEALING WASHERS @ 8" ON CENTER

A/R/C Associates Incorporated
Architecture
Roof Consulting
Construction Technology
LIC. NBR AAC000932
601 North Fern Creek Avenue
Suite 100 Orlando, FL 32803-4899
Tel. (407) 896-7875
Fax. (407) 898-6043
COPYRIGHT © 2020 A/R/C ASSOCIATES, INC.

--/--/--

JAMES W. RIPLEY AR-12758

REVISIONS		
NO.	DATE	BY:

SJCSB PROJECT NO: 2020-35

ROOF REPLACEMENT AT:
FIRST COAST TECHNICAL COLLEGE - BUILDINGS "B"
2980 COLLINS AVE. ST. AUGUSTINE, FL 32084
ST. JOHNS COUNTY SCHOOL DISTRICT

ROOFTOP EQUIPMENT FLASHING DETAILS

JOB NO.:	20021.00
DRAWN BY:	JPP
CHECKED BY	JWR
DATE	11/06/20
SCALE:	1=1
PLOT SCALE:	AS NOTED

B07

SHEET NO.: 19072.00

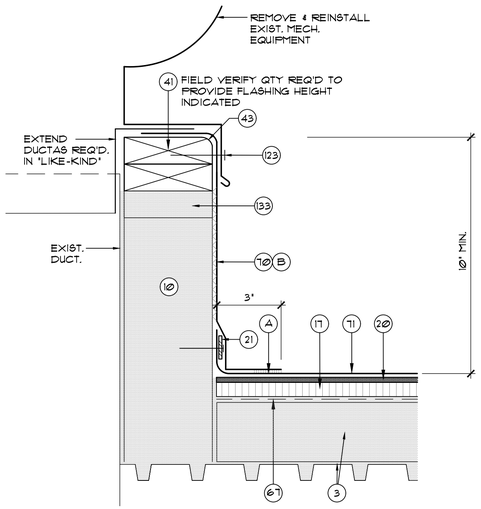

B08.1 TYPICAL POWER VENT CURB AND FLASHING DETAIL

SCALE: 3" = 1'-0"

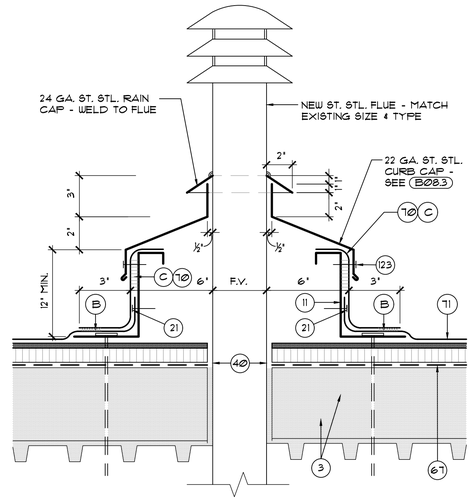

B08.2 HOT STACK CURB AND FLASHING DETAIL

SCALE: 3" = 1'-0"

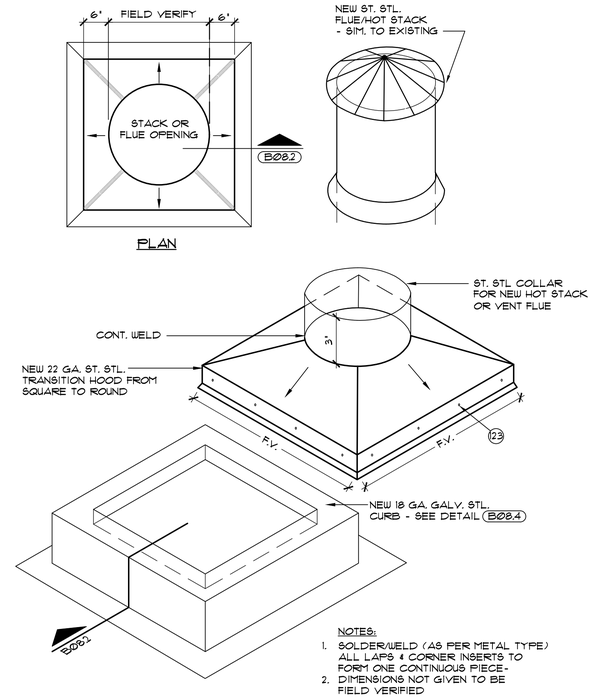

B08.3 TYP. HOT STACK CURB CAP FABRICATION

SCALE: NONE

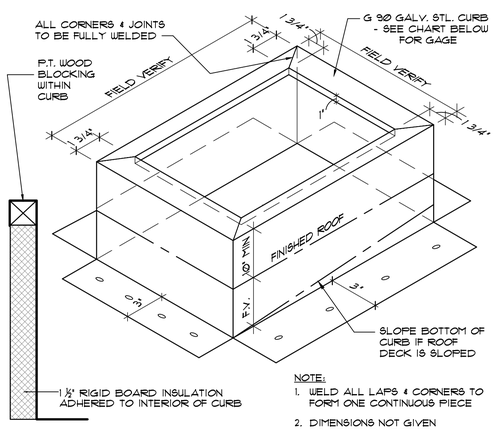

CURB DATA				
MIN SIZE	MAX SIZE	METAL GAGE	ANCHORAGE - CONC DECK	ANCHORAGE - 22 GA METAL DECK
-	24" SQ	20 GA.	¼"ϕ x 2¼" LG. TAPCONS@ 24" O.C.	¼"ϕ SCREW @ 12" O.C.
25" SQ	60" SQ	18 GA.	¼"ϕ x 2¼" LG. TAPCONS@ 18" O.C.	¼"ϕ SCREW @ 9" O.C.
61" SQ	120" SQ	16 GA.	¼"ϕ x 2¼" LG. TAPCONS@ 12" O.C.	¼"ϕ SCREW @ 6" O.C.
121" SQ	240" SQ	14 GA.	⅜"ϕ x 3" RAWL-BOLT @ 32" O.C.	3/8"ϕ THRU-BOLT @ 32" O.C.

B08.4 TYPICAL CURB FABRICATION AND ANCHORAGE DETAIL

SCALE: NONE

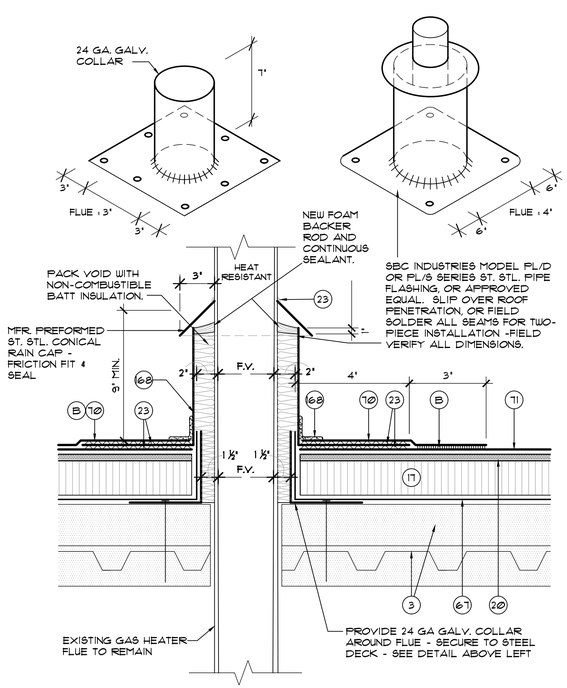

B08.5 GAS FLUE / EXHAUST WITH COLLAR FLASHING

SCALE: 3" = 1'-0"

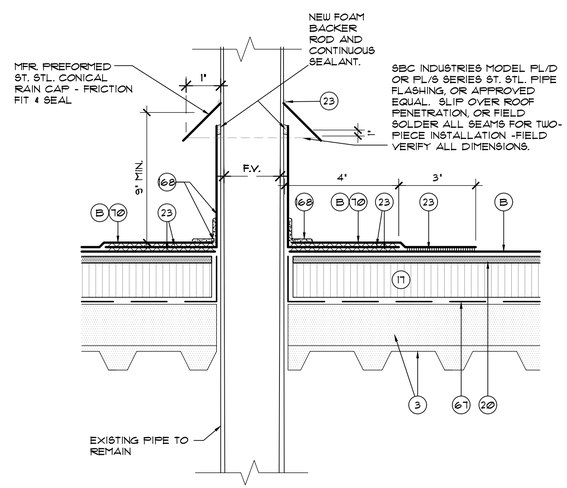

B08.6 EXISTING ROOF PENETRATION WITH COLLAR FLASHING DETAIL

SCALE: 3" = 1'-0"

DETAIL NOTES

2. EXISTING MASONRY CAVITY WALL TO REMAIN UNCHANGED.
3. EXISTING LIGHTWEIGHT CONCRETE WITH INTEGRAL EPS INSULATION OVER GALVANIZED STEEL DECK TO REMAIN UNCHANGED.
5. EXISTING CAST-IN-PLACE CONCRETE TIE BEAM TO REMAIN.
9. EXIST. MECHANICAL EQUIPMENT TO BE REUSED & REINSTALLED.
10. EXISTING CURB CONSTRUCTION TO REMAIN, MODIFY AS REQ'D AND AS DETAILED TO INCREASE FLASHING HEIGHT.
11. NEW METAL CURB ASSEMBLY WITH PRESSURE TREATED WOOD BLOCKING AND RIGID INSULATION, SEE DETAIL B08.4
17. NEW 1-1/2" THICK NON-TAPERED RIGID INSULATION IN FIELD.
18. NEW 1/8" PER FOOT TAPERED RIGID INSULATION WHERE INDICATED.
20. NEW 1/4" THICK PRIMED GYPSUM ROOF BOARD - FULLY PRIME.
21. ALUM. TERMINATION BAR, SET "TIGHT" TO ROOF, SEE DETAIL B04.1.
22. 24 GA. ST. STL. COUNTERFLASHING, SEE DETAIL B07.4
23. CONTINUOUS SEALANT - SEE SPECS FOR TYPE.
24. DOUBLE SIDED BUTYL FLASHING TAPE
32. CONT. CLEAT PER DETAIL NOTED - ANCHOR PER FASTENER SCHEDULE.
40. EXISTING PLUMBING VENT STACK TO REMAIN, EXTEND AS REQ'D FROM BELOW DECK OR WITH OMG "TUBOS"
41. NEW 2" THICK (NOM.) (U.N.O.) PRESSURE TREATED WOOD BLOCKING AT EDGE OF ROOF - ANCHOR PER FASTENER SCHEDULE.
42. 5/8" CDX PLYWOOD, ANCHOR AT 12" O.C. AT ALL EDGES, AND AS DEFINED BY FASTENER SCHEDULE
43. ROUND EDGE TO PROTECT MEMBRANE.
44. REMOVE EXISTING FASCIA BOARD AND REPLACE WITH NEW 1 x 8 PRESSURE TREATED FASCIA BOARD, NOTCH & RIP AS SHOWN, SECURE TO EXISTING FASCIA FRAMING.
45. EXISTING STRUCTURE AND/OR FRAMING TO REMAIN UNCHANGED.
46. CONTINUOUS WOOD OR PLYWOOD BLOCKING, FIELD VERIFY SEAM HEIGHT TO DETERMINE THICKNESS REQUIRED.
47. NEW 2" THICK P.T. WOOD BLOCKING, RIP AND TAPER TO MATCH NEW RIGID INSULATION -ANCHOR PER FASTENER SCHEDULE.
48. REMOVE EXIST. FASCIA BOARD AND REPLACE WITH NEW 2 x 10 P.T. FASCIA BD., NOTCH AS SHOWN, SECURE TO EXIST. CONSTRUCTION.
51. SELF-ADHESIVE MOD. BIT. UNDERLAYMENT / "DRY-IN" MEMBRANE.
61. 0.040" ALUM. PVC COATED EDGE METAL DECK FLANGE, "HOOK" TO TRANSITION FLASHING AND SECURE - SEE DETAIL B04.5.
62. PRE-FINISHED 0.040" ALUM. TRANSITION FLASHING - "HOOK" TO Z-CLOSURE & SECURE -SEE DETAIL B04.5.
63. PRE-FINISHED 0.040" ALUM. FASCIA CLADDING - "HOOK" TO WD. BLOCKING & SECURE -SEE DETAIL B05.2.
64. EDGE METAL PVC CLAD ALUM. DECK FLANGE -SEE DETAIL B02.2.
65. TWO-PIECE EDGE METAL ST. STL. FASCIA -SEE DETAIL B02.2.
66. ST. STL. FASCIA SKIRT, "HOOK" TO P.T. FASCIA BD. AND SECURE.
67. FIBERGLASS VENTED BASE SHEET -LOOSE LAID.
70. PVC THERMOPLASTIC SINGLE-PLY FLASHING MEMBRANE
71. PVC THERMOPLASTIC SINGLE-PLY ROOFING MEMBRANE.
73. PREFORMED PVC PIPE FLASHING "BOOT", HEAT WELD TO FIELD.
80. NEW PRE-FINISHED 0.040" ALUMINUM ROOF PANELS.
81. MFR'S. STD. ANCHOR CLIP - SCREW TO PLYWOOD DECK BELOW PER MFR'S RECOMMENDATIONS.
82. NEW PRE-FINISHED 0.050" ALUM. "Z-CLOSURE", SECURE OVER BUTYL TAPE AND SEAL - SEE DETAIL B03.4.
83. "BOX" TOP OF PANEL IN FIELD WITHOUT CUTTING.
84. NEW PRE-FINISHED 0.040" ALUM. DRIP EDGE FLASHING - OVERLAP FASCIA METAL & SECURE -SEE DETAIL B05.2.
86. METAL RIDGE CAP-SLIDE ON OVER "Z-CLOSURE" & SECURE WITH BUTTON PUNCH. PROVIDE SPLICE CLEAT @ JOINT. SEE DETAILS B05.5 AND B05.6.
87. CLOSED CELL FOAM RUBBER CLOSURE-SIZE AS REQ'D FOR FRICTION FIT WITHIN EACH PANEL & SEAL.
111. 3" WIDE ST. STL. RETAINER CLEATS @ 18" O.C. WITH TWO FASTENERS EACH -FOLD UP IN FIELD TO SECURE FLASHING ABOVE.
122. ST. STL. ROOFING NAIL(S) PER FASTENER SCHEDULE.
123. #12ϕ x 2" LONG "SCOTS" TYPE SCREW WITH NEOPRENE WASHER UNDER HEAD AT 12" O.C. MAX, (2 MIN PER SIDE).
133. EXISTING WOOD BLOCKING TO REMAIN, REPLACE ANY DETERIORATED MATERIAL PER THE UNIT PRICES.
134. EXIST. PLYWOOD TO REMAIN, REANCHOR TO WOOD FURRING WITH 10d RING SHANK NAILS @ 4" O.C. REPLACE DETERIORATED MAT'L. PER UNIT PRICES.
136. PACK VOID WITH NON-COMBUSTIBLE INSULATION.
168. MANUFACTURER APPROVED FABRIC REINFORCED LIQUID APPLIED FLASHING COMPOUND AT METAL-TO-MEMBRANE JOINT.

A. SOLDERED OR EPOXIED ONE-PIECE TERMINATION OR TRANSITION FABRICATION - CONFIGURE AS SHOWN.
B. HEAT WELD MEMBRANE PER MFR'S REQUIREMENTS.
C. FULLY ADHERE WITH MFR. APPROVED ADHESIVE.
D. FASTENERS WITH STRESS PLATE PER MFR'S. REQ'MTS.
E. TYP. SPLICE JOINT WITH CLEAT PER PROJECT DETAILS.
F. TYP. SPLICE JOINT WITH HEAT-WELDED MEMBRANE PER PROJECT DETAILS.
G. 1/2" MIN. HEMMED EDGE WITH CONTINUOUS SEALANT.
H. 1/4" DIA. ST. STL. SCREW W/ NEOPRENE BACKED METAL SEALING WASHERS @ 8" ON CENTER

A/R/C Associates Incorporated
Architecture
Roof Consulting
Construction Technology
LIC. NBR AAC000932
601 North Fern Creek Avenue
Suite 100 Orlando, FL 32803-4899
Tel. (407) 896-7875
Fax. (407) 896-6043

COPYRIGHT © 2020 A/R/C ASSOCIATES, INC.

--/--/--

JAMES W. RIPLEY AR-12758

REVISIONS

NO.	DATE	BY:

SJCSB PROJECT NO: 2020-35

ROOF REPLACEMENT AT:

FIRST COAST TECHNICAL COLLEGE - BUILDINGS "B"
2980 COLLINS AVE. ST. AUGUSTINE, FL 32084
ST. JOHNS COUNTY SCHOOL DISTRICT

ROOF PENETRATION FLASHING DETAILS

JOB NO.:	20021.00
DRAWN BY:	JPP
CHECKED BY	JWR
DATE	11/06/20
SCALE:	1=1
PLOT SCALE:	AS NOTED

B08

SHEET NO.: 19072.00

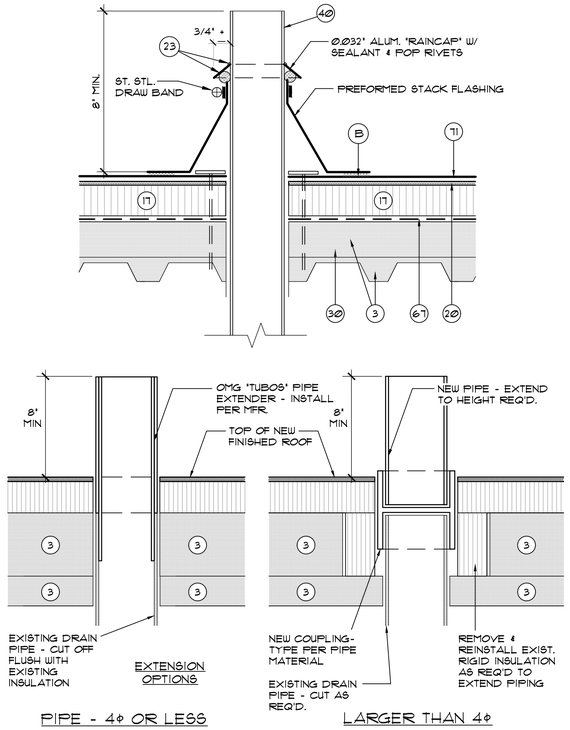

B09.1 TYPICAL PLUMBING VENT THRU ROOF (VTR) FLASHING

SCALE: 3" = 1'-0"

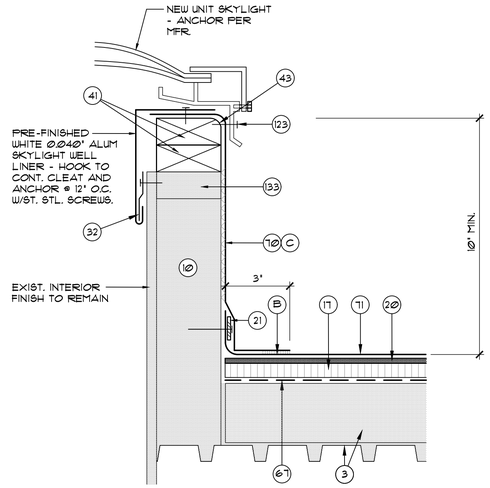

B09.2 SKYLIGHT CURB AND FLASHING DETAIL

SCALE: 3" = 1'-0"

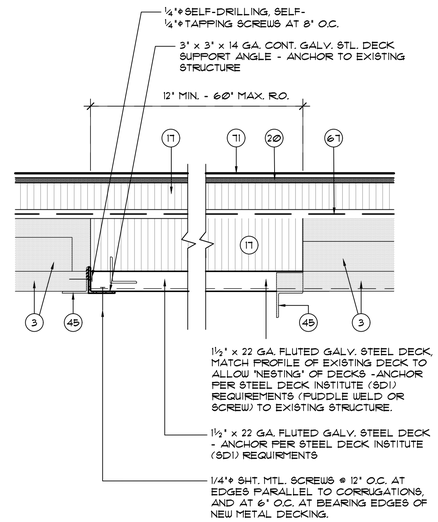

B09.3 TYP. DECK INFILL DETAIL AT EXISTING OPENING

SCALE: 3" = 1'-0"

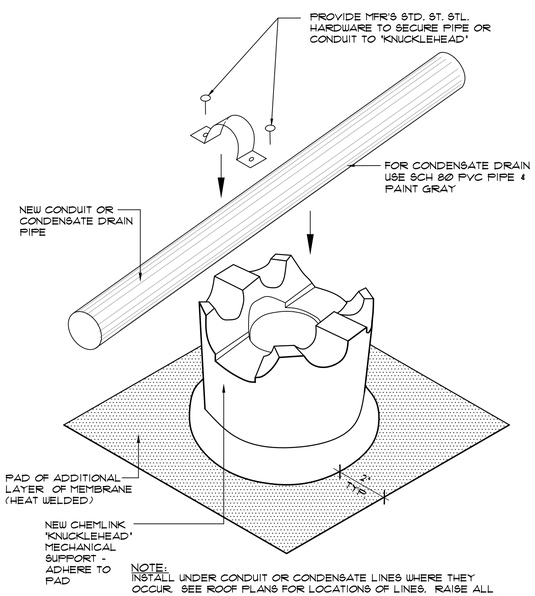

B09.4 CONDENSATE PIPING AND SUPPORT BLOCK

SCALE: NONE

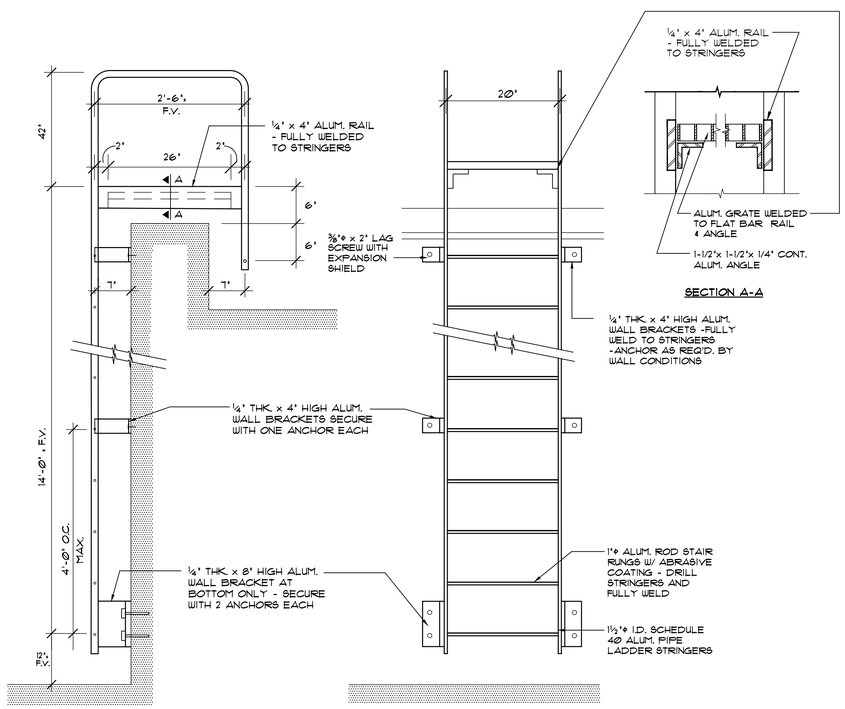

B09.5 WALL MOUNTED ROOF ACCESS LADDER DETAILS

SCALE: NONE

DETAIL NOTES

2. EXISTING MASONRY CAVITY WALL TO REMAIN UNCHANGED.
3. EXISTING LIGHTWEIGHT CONCRETE WITH INTEGRAL EPS INSULATION OVER GALVANIZED STEEL DECK TO REMAIN UNCHANGED.
5. EXISTING CAST-IN-PLACE CONCRETE TIE BEAM TO REMAIN.
9. EXIST. MECHANICAL EQUIPMENT TO BE REUSED & REINSTALLED.
10. EXISTING CURB CONSTRUCTION TO REMAIN, MODIFY AS REQ'D AND AS DETAILED TO INCREASE FLASHING HEIGHT.
11. NEW METAL CURB ASSEMBLY WITH PRESSURE TREATED WOOD BLOCKING AND RIGID INSULATION, SEE DETAIL B08.4
17. NEW 1-1/2" THICK NON-TAPERED RIGID INSULATION IN FIELD.
18. NEW 1/8" PER FOOT TAPERED RIGID INSULATION WHERE INDICATED.
20. NEW 1/4" THICK PRIMED GYPSUM ROOF BOARD - FULLY PRIME.
21. ALUM. TERMINATION BAR, SET 'TIGHT' TO ROOF, SEE DETAIL B04.1.
22. 24 GA. ST. STL. COUNTERFLASHING, SEE DETAIL B07.4
23. CONTINUOUS SEALANT - SEE SPECS FOR TYPE.
24. DOUBLE SIDED BUTYL FLASHING TAPE
32. CONT. CLEAT PER DETAIL NOTED - ANCHOR PER FASTENER SCHEDULE.
40. EXISTING PLUMBING VENT STACK TO REMAIN, EXTEND AS REQ'D FROM BELOW DECK OR WITH OMG 'TUBOS'
41. NEW 2" THICK (NOM.) (U.N.O.) PRESSURE TREATED WOOD BLOCKING AT EDGE OF ROOF - ANCHOR PER FASTENER SCHEDULE.
42. 5/8" CDX PLYWOOD, ANCHOR AT 12" O.C. AT ALL EDGES, AND AS DEFINED BY FASTENER SCHEDULE
43. ROUND EDGE TO PROTECT MEMBRANE.
44. REMOVE EXISTING FASCIA BOARD AND REPLACE WITH NEW 1 x 8 PRESSURE TREATED FASCIA BOARD, NOTCH & RIP AS SHOWN, SECURE TO EXISTING FASCIA FRAMING.
45. EXISTING STRUCTURE AND/OR FRAMING TO REMAIN UNCHANGED.
46. CONTINUOUS WOOD OR PLYWOOD BLOCKING, FIELD VERIFY SEAM HEIGHT TO DETERMINE THICKNESS REQUIRED.
47. NEW 2" THICK P.T. WOOD BLOCKING, RIP AND TAPER TO MATCH NEW RIGID INSULATION -ANCHOR PER FASTENER SCHEDULE.
48. REMOVE EXIST. FASCIA BOARD AND REPLACE WITH NEW 2 x 10 P.T. FASCIA BD., NOTCH AS SHOWN, SECURE TO EXIST. CONSTRUCTION.
51. SELF-ADHESIVE MOD. BIT. UNDERLAYMENT / 'DRY-IN' MEMBRANE.
61. ØØ40" ALUM. PVC COATED EDGE METAL DECK FLANGE, 'HOOK' TO TRANSITION FLASHING AND SECURE - SEE DETAIL B04.3.
62. PRE-FINISHED ØØ40" ALUM. TRANSITION FLASHING - 'HOOK' TO Z-CLOSURE & SECURE -SEE DETAIL B04.5.
63. PRE-FINISHED ØØ40" ALUM. FASCIA CLADDING - 'HOOK' TO WD. BLOCKING & SECURE -SEE DETAIL B05.2.
64. EDGE METAL PVC CLAD ALUM. DECK FLANGE -SEE DETAIL B02.2.
65. TWO-PIECE EDGE METAL ST. STL. FASCIA -SEE DETAIL B02.2.
66. ST. STL. FASCIA SKIRT, 'HOOK' TO P.T. FASCIA BD. AND SECURE.
67. FIBERGLASS VENTED BASE SHEET -LOOSE LAID.
70. PVC THERMOPLASTIC SINGLE-PLY FLASHING MEMBRANE
71. PVC THERMOPLASTIC SINGLE-PLY ROOFING MEMBRANE.
73. PREFORMED PVC PIPE FLASHING 'BOOT', HEAT WELD TO FIELD.
80. NEW PRE-FINISHED ØØ40" ALUMINUM ROOF PANELS.
81. MFR'S. STD. ANCHOR CLIP - SCREW TO PLYWOOD DECK BELOW PER MFR'S RECOMMENDATIONS.
82. NEW PRE-FINISHED ØØ50" ALUM. 'Z-CLOSURE', SECURE OVER BUTYL TAPE AND SEAL - SEE DETAIL B03.4.
83. 'BOX' TOP OF PANEL IN FIELD WITHOUT CUTTING.
84. NEW PRE-FINISHED ØØ40" ALUM. DRIP EDGE FLASHING - OVERLAP FASCIA METAL & SECURE -SEE DETAIL B05.2.
86. METAL RIDGE CAP-SLIDE ON OVER 'Z-CLOSURE' & SECURE WITH BUTTON PUNCH. PROVIDE SPLICE CLEAT @ JOINT. SEE DETAILS B05.5 AND B05.6.
87. CLOSED CELL FOAM RUBBER CLOSURE-SIZE AS REQ'D FOR FRICTION FIT WITHIN EACH PANEL & SEAL.
111. 3" WIDE ST. STL. RETAINER CLEATS @ 18" O.C. WITH TWO FASTENERS EACH -FOLD UP IN FIELD TO SECURE FLASHING ABOVE.
122. ST. STL. ROOFING NAIL(S) PER FASTENER SCHEDULE.
123. #12ϕ x 2" LONG 'SCOTS' TYPE SCREW WITH NEOPRENE WASHER UNDER HEAD AT 12" O.C. MAX, (2 MIN PER SIDE).
133. EXISTING WOOD BLOCKING TO REMAIN, REPLACE ANY DETERIORATED MATERIAL PER THE UNIT PRICES.
134. EXIST. PLYWOOD TO REMAIN, REANCHOR TO WOOD FURRING WITH 10d RING SHANK NAILS @ 4" O.C. REPLACE DETERIORATED MAT'L. PER UNIT PRICES.
136. PACK VOID WITH NON-COMBUSTIBLE INSULATION.
168. MANUFACTURER APPROVED FABRIC REINFORCED LIQUID APPLIED FLASHING COMPOUND AT METAL-TO-MEMBRANE JOINT.

A. SOLDERED OR EPOXIED ONE-PIECE TERMINATION OR TRANSITION FABRICATION - CONFIGURE AS SHOWN.
B. HEAT WELD MEMBRANE PER MFR'S REQUIREMENTS.
C. FULLY ADHERE WITH MFR. APPROVED ADHESIVE.
D. FASTENERS WITH STRESS PLATE PER MFR'S. REQ'MTS.
E. TYP. SPLICE JOINT WITH CLEAT PER PROJECT DETAILS.
F. TYP. SPLICE JOINT WITH HEAT-WELDED MEMBRANE PER PROJECT DETAILS.
G. 1/2" MIN. HEMMED EDGE WITH CONTINUOUS SEALANT.
H. 1/4" DIA. ST. STL. SCREW W/ NEOPRENE BACKED METAL SEALING WASHERS @ 8" ON CENTER

A/R/C Associates Incorporated
Architecture
Roof Consulting
Construction Technology
LIC. NBR AAC000932
601 North Fern Creek Avenue
Suite 100 Orlando, FL 32803-4899
Tel. (407) 896-7875
Fax. (407) 898-6043

COPYRIGHT © 2020 A/R/C ASSOCIATES, INC.

--/--/--

JAMES W. RIPLEY AR-12758

REVISIONS		
NO.	DATE	BY:

SJCSB PROJECT NO: 2020-35

ROOF REPLACEMENT AT:

FIRST COAST TECHNICAL COLLEGE - BUILDINGS "B"
2980 COLLINS AVE. ST. AUGUSTINE, FL 32084
ST. JOHNS COUNTY SCHOOL DISTRICT

ROOF PENETRATION FLASHING DETAILS

JOB NO.:	20021.00
DRAWN BY:	JPP
CHECKED BY	JWR
DATE	11/06/20
SCALE:	1=1
PLOT SCALE:	AS NOTED

B09

SHEET NO.: 19072.00

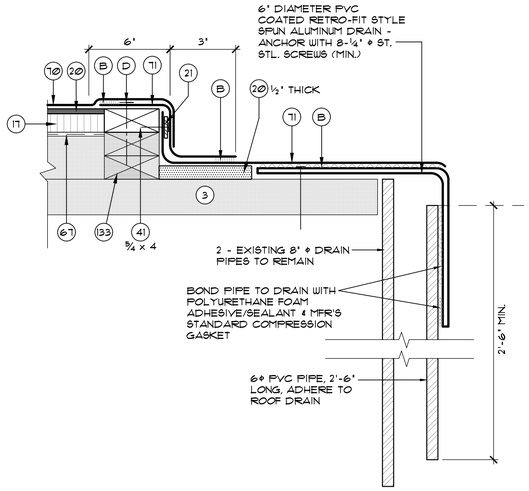

B10.1 PRIMARY ROOF DRAIN AND FLASHING DETAIL

SCALE: 3" = 1'-0"

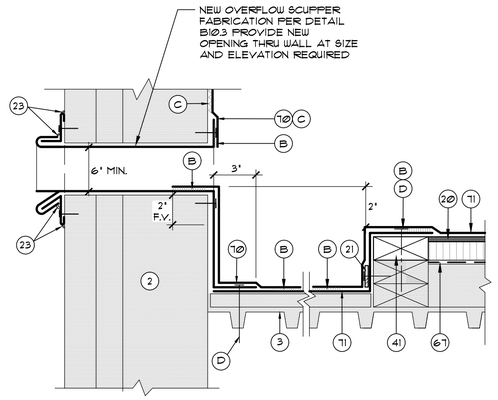

B10.2 OVERFLOW SCUPPER AND FLASHING DETAIL

SCALE: 3" = 1'-0"

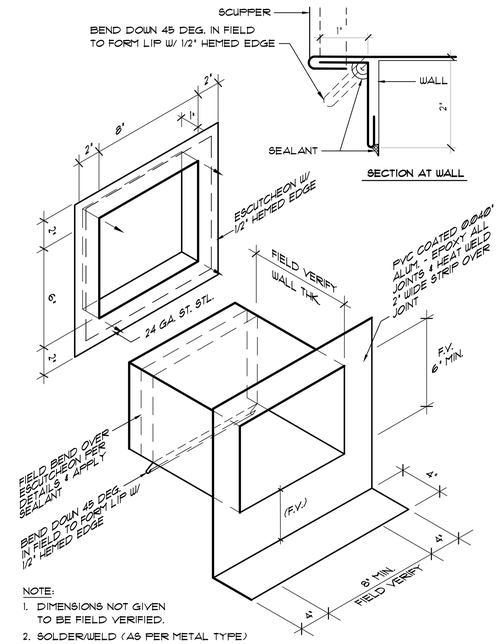

NOTE:

1. DIMENSIONS NOT GIVEN TO BE FIELD VERIFIED.
2. SOLDER/WELD (AS PER METAL TYPE) ALL LAPS & CORNER INSERTS TO FORM ONE CONTINUOUS PIECE
3. SLEEVE TO BE ON THE OUTSIDE OF SCUPPER

B10.3 OVERFLOW SCUPPER FABRICATION DETAIL

SCALE: NONE

DETAIL NOTES

2. EXISTING MASONRY CAVITY WALL TO REMAIN UNCHANGED.
3. EXISTING LIGHTWEIGHT CONCRETE WITH INTEGRAL EPS INSULATION OVER GALVANIZED STEEL DECK TO REMAIN UNCHANGED.
5. EXISTING CAST-IN-PLACE CONCRETE TIE BEAM TO REMAIN.
9. EXIST. MECHANICAL EQUIPMENT TO BE REUSED & REINSTALLED.
10. EXISTING CURB CONSTRUCTION TO REMAIN, MODIFY AS REQ'D AND AS DETAILED TO INCREASE FLASHING HEIGHT.
11. NEW METAL CURB ASSEMBLY WITH PRESSURE TREATED WOOD BLOCKING AND RIGID INSULATION, SEE DETAIL B08.4
17. NEW 1-1/2" THICK NON-TAPERED RIGID INSULATION IN FIELD.
18. NEW 1/8" PER FOOT TAPERED RIGID INSULATION WHERE INDICATED.
20. NEW 1/4" THICK PRIMED GYPSUM ROOF BOARD - FULLY PRIME.
21. ALUM. TERMINATION BAR, SET "TIGHT" TO ROOF, SEE DETAIL B04.1.
22. 24 GA. ST. STL. COUNTERFLASHING, SEE DETAIL B07.4
23. CONTINUOUS SEALANT - SEE SPECS FOR TYPE.
24. DOUBLE SIDED BUTYL FLASHING TAPE
32. CONT. CLEAT PER DETAIL NOTED - ANCHOR PER FASTENER SCHEDULE.
40. EXISTING PLUMBING VENT STACK TO REMAIN, EXTEND AS REQ'D FROM BELOW DECK OR WITH OMG "TUBOS"
41. NEW 2" THICK (NOM.) (U.N.O.) PRESSURE TREATED WOOD BLOCKING AT EDGE OF ROOF - ANCHOR PER FASTENER SCHEDULE.
42. 5/8" CDX PLYWOOD, ANCHOR AT 12" O.C. AT ALL EDGES, AND AS DEFINED BY FASTENER SCHEDULE
43. ROUND EDGE TO PROTECT MEMBRANE.
44. REMOVE EXISTING FASCIA BOARD AND REPLACE WITH NEW 1 x 8 PRESSURE TREATED FASCIA BOARD, NOTCH & RIP AS SHOWN, SECURE TO EXISTING FASCIA FRAMING.
45. EXISTING STRUCTURE AND/OR FRAMING TO REMAIN UNCHANGED.
46. CONTINUOUS WOOD OR PLYWOOD BLOCKING, FIELD VERIFY SEAM HEIGHT TO DETERMINE THICKNESS REQUIRED.
47. NEW 2" THICK P.T. WOOD BLOCKING, RIP AND TAPER TO MATCH NEW RIGID INSULATION -ANCHOR PER FASTENER SCHEDULE.
48. REMOVE EXIST. FASCIA BOARD AND REPLACE WITH NEW 2 x 10 P.T. FASCIA BD., NOTCH AS SHOWN, SECURE TO EXIST. CONSTRUCTION.
51. SELF-ADHESIVE MOD. BIT. UNDERLAYMENT / "DRY-IN" MEMBRANE.
61. ϕϕ40" ALUM. PVC COATED EDGE METAL DECK FLANGE, "HOOK" TO TRANSITION FLASHING AND SECURE - SEE DETAIL B04.5.
62. PRE-FINISHED ϕϕ40" ALUM. TRANSITION FLASHING - "HOOK" TO Z-CLOSURE & SECURE -SEE DETAIL B04.5.
63. PRE-FINISHED ϕϕ40" ALUM. FASCIA CLADDING - "HOOK" TO WD. BLOCKING & SECURE -SEE DETAIL B05.2.
64. EDGE METAL PVC CLAD ALUM. DECK FLANGE -SEE DETAIL B02.2.
65. TWO-PIECE EDGE METAL ST. STL. FASCIA -SEE DETAIL B02.2.
66. ST. STL. FASCIA SKIRT, "HOOK" TO P.T. FASCIA BD. AND SECURE.
67. FIBERGLASS VENTED BASE SHEET -LOOSE LAID.
70. PVC THERMOPLASTIC SINGLE-PLY FLASHING MEMBRANE
71. PVC THERMOPLASTIC SINGLE-PLY ROOFING MEMBRANE.
73. PREFORMED PVC PIPE FLASHING "BOOT", HEAT WELD TO FIELD.
80. NEW PRE-FINISHED ϕϕ40" ALUMINUM ROOF PANELS.
81. MFR'S. STD. ANCHOR CLIP - SCREW TO PLYWOOD DECK BELOW PER MFR'S RECOMMENDATIONS.
82. NEW PRE-FINISHED ϕϕ50" ALUM. "Z-CLOSURE", SECURE OVER BUTYL TAPE AND SEAL - SEE DETAIL B03.4.
83. "BOX" TOP OF PANEL IN FIELD WITHOUT CUTTING.
84. NEW PRE-FINISHED ϕϕ40" ALUM. DRIP EDGE FLASHING - OVERLAP FASCIA METAL & SECURE -SEE DETAIL B05.2.
86. METAL RIDGE CAP-SLIDE ON OVER "Z-CLOSURE" & SECURE WITH BUTTON PUNCH. PROVIDE SPLICE CLEAT @ JOINT. SEE DETAILS B05.5 AND B05.6.
87. CLOSED CELL FOAM RUBBER CLOSURE-SIZE AS REQ'D FOR FRICTION FIT WITHIN EACH PANEL & SEAL.
111. 3" WIDE ST. STL. RETAINER CLEATS @ 18" O.C. WITH TWO FASTENERS EACH -FOLD UP IN FIELD TO SECURE FLASHING ABOVE.
122. ST. STL. ROOFING NAIL(S) PER FASTENER SCHEDULE.
123. #12ϕ x 2" LONG "SCOTS" TYPE SCREW WITH NEOPRENE WASHER UNDER HEAD AT 12" O.C. MAX, (2 MIN PER SIDE).
133. EXISTING WOOD BLOCKING TO REMAIN, REPLACE ANY DETERIORATED MATERIAL PER THE UNIT PRICES.
134. EXIST. PLYWOOD TO REMAIN, REANCHOR TO WOOD FURRING WITH 10d RING SHANK NAILS @ 4" O.C. REPLACE DETERIORATED MAT'L. PER UNIT PRICES.
136. PACK VOID WITH NON-COMBUSTIBLE INSULATION.
168. MANUFACTURER APPROVED FABRIC REINFORCED LIQUID APPLIED FLASHING COMPOUND AT METAL-TO-MEMBRANE JOINT.

A. SOLDERED OR EPOXIED ONE-PIECE TERMINATION OR TRANSITION FABRICATION - CONFIGURE AS SHOWN.
B. HEAT WELD MEMBRANE PER MFR'S REQUIREMENTS.
C. FULLY ADHERE WITH MFR. APPROVED ADHESIVE.
D. FASTENERS WITH STRESS PLATE PER MFR'S. REQ'MTS.
E. TYP. SPLICE JOINT WITH CLEAT PER PROJECT DETAILS.
F. TYP. SPLICE JOINT WITH HEAT-WELDED MEMBRANE PER PROJECT DETAILS.
G. 1/2" MIN. HEMMED EDGE WITH CONTINUOUS SEALANT.
H. 1/4" DIA. ST. STL. SCREW W/ NEOPRENE BACKED METAL SEALING WASHERS @ 8" ON CENTER

A/R/C Associates Incorporated
Architecture
Roof Consulting
Construction Technology
LIC. NBR AAC000932
601 North Fern Creek Avenue
Suite 100 Orlando, FL 32803-4899
Tel. (407) 896-7875
Fax. (407) 896-6043

COPYRIGHT © 2020 A/R/C ASSOCIATES, INC.

--/--/--

JAMES W. RIPLEY AR-12758

REVISIONS		
NO.	DATE	BY:

SJCSB PROJECT NO: 2020-35

ROOF REPLACEMENT AT:

FIRST COAST TECHNICAL COLLEGE - BUILDINGS "B"
2980 COLLINS AVE. ST. AUGUSTINE, FL 32084
ST. JOHNS COUNTY SCHOOL DISTRICT

ROOF DRAINAGE + MISCELLANEOUS DETAILS

JOB NO.:	20021.00
DRAWN BY:	JPP
CHECKED BY	JWR
DATE	11/06/20
SCALE:	1=1
PLOT SCALE:	AS NOTED

B10

SHEET NO.: 19072.00

ADDENDUM NO. 1

ROOF REPLACEMENT and REPAIRS – BUILDING B

FIRST COAST TECHNICAL COLLEGE
2980 Collins Avenue
St. Augustine, Florida 32084

FOR

St. Johns County School District
299 School House Road
St. Augustine, Florida 32084

PREPARED BY:

A/R/C ASSOCIATES, INCORPORATED
601 North Fern Creek Avenue - Suite 100
Orlando, Florida 32803
(407) 896-7875 FAX # (407) 898-6043

Date: **January 28, 2021**

SJCSD Bid # 2020-35
A/R/C Project No: 20021.00

COPYRIGHTED 2021 BY A/R/C ASSOCIATES, INCORPORATED

This Project Manual is a copyrighted document of A/R/C Associates, Incorporated and may not be reproduced or excerpted from in whole or in part without the expressed written permission of A/R/C Associates, Incorporated. It is only to be used for the project and site specifically identified herein and is not to be used on any other project or extensions of this project. This document is to be returned upon request.

James W Ripley AR-12758

ADDENDUM 00901

ADDENDA AND MODIFICATIONS

PART 1 GENERAL

1.01 MODIFICATIONS

A. Addendum No. 1, dated January 28, 2021 forms a part of the Project Manual and takes precedence over the original words, or ideas, with "Add" to, "Delete" from, or "Revise" to in the original words, phrases, paragraphs or Sections of the original Project Manual, dated November 6, 2020.

B. This Addendum consists of three (3) pages and four (4) attachments. If any pages are missing or illegible, Architect will provide replacements to complete the issued Documents on request. Attachments are as follows:
1. Pre-Bid Meeting Minutes and Sign-in Sheet (11 pages).
2. Section 00003 - Project Manual Index, page 1 (only).
3. Section B – Form of Proposal, page 6 (only).
4. SJCSD E-Verify Requirements form, (1 page).

C. Bidders shall acknowledge receipt of this Addendum in the space provided on the Bid Proposal Form. Failure to do so may subject the Bidder to disqualification.

D. A/R/C Associates, Inc. has compiled minutes from the January 25, 2021 Pre-Bid Meeting, a copy of which is attached to this addendum. These minutes are to be included within and become part of the documents for this project.

1.02 CHANGES TO PROJECT MANUAL:

Item 1.01: Section 00003 – Project Manual Index: DELETE page 1 as originally issued and ADD the revised page 1 which is attached to this addendum.

Item 1.02: Section B – Form of Proposal: DELETE page 6 as originally issued and ADD the revised page 6 which is attached to this addendum.

Item 1.03: Section B – Form of Proposal: ADD the new “SJCSD E-Verify Requirements” form which is attached to this addendum. Submission of this completed form within the bid package is required.

Item 1.04: Section 01110 – Summary of Work: ADD paragraph 1.7/H which is to read as follows:
“H. Contractor to provide an OSHA acceptable external means of worker access to the roof for the duration of the project. Use of internal means of roof access is prohibited.”

Item 1.05: Section 07410 – Standing Seam Metal Roofing: ADD paragraphs 2.5/A/7 which is to read as follows:
“7. Carlisle WIP 300 HT.”

Item 1.06: Section 07530 – Thermoplastic Single-ply Roofing: ADD paragraphs 2.1/A/1/j and 2.1/A/1/k which are to read as follows:
"i. Mule-Hide Products, Inc. PVC
j. Tremco Roofing TPA Membrane."

Item 1.07: Section 07530 – Thermoplastic Single-ply Roofing: ADD paragraphs 2.1/A/2/h, 2.1/A/2/i and 2.1/A/2/j which are to read as follows:
"h. Mule-Hide Products, Inc. PVC KEE HP
i. Siplast Parasolo PVC KEE
j. Tremco Roofing Tremply KEE."

1.03 CHANGES TO PROJECT DRAWINGS: NONE

1.04 CHANGES TO PROJECT DETAILS NONE

END OF ADDENDUM NO. 1

Architecture
Roof Consulting
Construction Technology
AA C000932

A/R/C Associates Incorporated

601 North Fern Creek Avenue
Suite 100
Orlando, Florida 32803-4899
(407) 896-7875
FAX (407) 898-6043

PRE-BID MEETING MINUTES

Roof Replacement – FCTC Building A	SJCSB Bid # 2020-34	A/R/C Project No. 19072.00
Roof Replacement – FCTC Building B	SJCSB Bid # 2020-35	A/R/C Project No. 20021.00
Roof Replacement – Maintenance Building	SJCSB Bid # 2020-36	A/R/C Project No. 17067.00

Date: January 25, 2021 Location: St. Johns Maintenance Warehouse

A mandatory pre-bid meeting was held at the above referenced facility on Monday, January 25, 2021 at 10:00 a.m. to review the bidding procedures and conditions. A listing of attendees is attached.

Items of discussion during the meeting and site inspection are as follows:

1. The bid date and other critical dates were briefly reviewed, as defined in the project documents. Bids are due on February 17, 2021, at 3:00 p.m. at the SJCSD Office of Facilities and Construction, 3740 International Golf Parkway, Suite 200, St. Augustine, Florida 32092. The Owner hopes to have the contract awards approved at the March 9, 2021 School Board meeting to allow for submittals and ordering of any long lead-time items. The notice to proceed (NTP) will be dated March 12, 2021, and substantial completion is to be achieved by June 14, 2021.

2. A sign-in sheet was passed around for each attendee to sign, a copy of which will be attached to the Pre-Bid Meeting Minutes to be issued with the first project addendum. It is important that all attendees sign the sign-in sheet because only those attending this mandatory pre-bid will be allowed to bid the project.

3. Any questions, conflicts, or requests for information must be submitted to the Architect, James Ripley jimr@arc-arc.com in writing prior to 5:00 p.m. on Friday, February 5, 2021 to allow for inclusion of the requested data within a written bid Addenda no later than Wednesday, February 10, 2021. All addenda will be posted on DemandStar.

4. The following items were discussed at the pre-bid meeting:

   a. None of these facilities are seasonal in use like a typical K12 school, therefore the construction period is not confined to the typical summer break as has been done with previous SJCSD projects. All work will need to be coordinated with the Owner and activities on-site, all coordination and communication with the Owner regarding this project should be directed to the school district project manager for this project.

   b. The requirements of the Jessica Lunsford Act as enforced by St. Johns County Schools will apply to the two FCTC projects during the entire construction period, when staff or students are on campus. All workers on-site will be required to be cleared by St. Johns County Schools through the FDLE Sexual Predator database, provide state issued drivers license or other acceptable identification. All workers

on-site will be required to have company issued identification shirts or badges. This issue is addressed by article 4.37 of the General Conditions.

c. The Invitation to Bid, Instructions to Bidders and the General Requirements contain detailed instructions as to the overall project and the bidding requirements. The bidders should examine these sections carefully. There is a Bid Bond or Bid Security in the amount of 5% required. This is defined by Section B and a sample of the document, “Bid Bond”, is included for reference. The successful contractor will be required to submit a Performance and Payment Bond for 100% of the contract for construction. The contract for construction will be based on the “Owner-Contractor Agreement”, Section C with the General Conditions for the Contract. Copies of which have been included in the project manual for the bidders reference.

d. The successful bidder will need to be Pre-qualified with the school district prior to contract award, this can be accomplished by obtaining a Pre-Qualification form from Dennis Ramharry’s office at 904-547-8157. If not already pre-qualified with SJCSB, this completed form (and any attachments) needs to submitted prior to the Bid, or with the Bid for this project. This pre-qualification is effective for one year with St. Johns County School District.

e. The Owner anticipates utilizing an Owner Direct Purchase option as defined by article 4.7 of their General Conditions to save the cost of state sales tax, which was briefly reviewed by Dennis Ramharry. For material purchases from any supplier which exceeds $5,000.00, the contractor would place their order as they would normally, receive and verify delivery, and then upon receipt of the invoice from the supplier, review and certify the invoice. This invoice would then be submitted to the Owner. SJCSB would then issue a check directly to the supplier in approximately one week. At the end of the project, a Change Order would be issued to reduce the Contract amount by the cost of these direct material purchases and the State Sales Tax that would be associated with them.

f. The anticipated scope of work was briefly reviewed, as defined in the attached Agenda, the project documents and section 01110 of the specifications which should be referenced for more detail.

1. Maintenance Warehouse:
    a. Inspect roof to determine the exact repairs needed by the existing granule surfaced modified bitumen roof system.
    b. Perform any repairs necessary using the base bid unit price allowances.
    c. Remove existing edge metal, replace deteriorated wood blocking, replace base flashing and cant at all walls and curbs, torch apply modified bitumen dry-in membrane.
    d. Based on the infrared survey, remove and replace any existing “wet” roof membrane and rigid insulation in "like-kind" per the unit price allowances.
    e. Remove abandoned equipment and roof penetrations, infill opening to match existing.
    f. Remove any existing equipment with inadequate flashing height, provide curb extensions or modify / relocate services.
    g. Replace existing hot stack flues with new stainless steel flues, install new roof curbs and new round-to-square curb cap adapters.
    h. Apply a new KEE single-ply roof membrane adhered to the existing roof membrane, heat weld all joints and laps.
    i. Install new PVC coated aluminum edge flashings at the building

perimeter, with all associated terminations and fabrications.

j. Provide a manufacturer 20 year, no dollar limit (NDL) weathertightness warranty.

2. FCTC Building “A”:
   a. Remove existing single-ply roof down to the existing LWIC deck and all associated flashings.
   b. Repair and/or replace any damaged or deteriorated materials per the unit price allowances.
   c. Remove the existing metal roof panels, underlayment and flashing at perimeter mansard, replace any deteriorated deck per the unit price allowances.
   d. Verify existing plywood is properly secured, install additional fasteners as needed, apply a self-adhesive, modified bitumen membrane underlayment.
   e. Install new Kynar pre-finished fascia cladding, edge metal and aluminum standing seam mansard roof panels. Color to be selected by the Owner.
   f. Remove and reinstall on the existing curbs all power ventilators and new skylights, raise curb height and extend the ductwork as required.
   g. Remove existing gooseneck vent, provide, install new curb and stainless steel gooseneck vent.
   h. Raise / extend the existing plumbing vents (VTR) as required.
   i. Two large existing HVAC units to remain in place, install new base flashing and counterflashing, provide new curb mounted weatherheads, modify existing piping and electrical as needed.
   j. Existing curb mounted remote condenser and package A/C units to be removed and reinstalled on new capped combination curb cap with integral weatherhead. Modify and reroute all services as needed, install new condensate drain piping.
   k. Existing large round ducts to remain, clean and prepare duct to receive new single-ply flashing, apply a polyurethane liquid coating to the horizontal ductwork between the HVAC unit and the single-ply flashing at the roof penetration.
   l. Replace existing hot stack flues with new stainless steel flues, roof curbs, and round-to-square curb caps.
   m. Remove abandoned equipment and roof penetrations and infill deck, install new fabricated support stand for the roof ductwork.
   n. Apply a fiberglass vented base sheet, then 1/8” per foot tapered insulation, (1.5” x 48"), at perimeter, 2” flat insulation in field, 1/8” per foot tapered insulation at center. Provide new crickets upslope of all curbs, apply 1/4” gypsum coverboard.
   o. Install new PVC coated aluminum drip edge, apply a new 80 mil PVC / 60 mil KEE membrane mechanically fastened to underlying steel deck.
   p. Provide 20-year NDL weathertightness warranty design wind speed / pressure rider, and applicator’s 2-year warranty.

3. FCTC Building “B”:
   a. Remove existing single-ply roof down to the existing LWIC deck and all associated flashings.
   b. Repair and/or replace any damaged or deteriorated materials per the unit price allowances.
   c. Remove the existing metal roof panels, underlayment and flashing at southwest entrance mansard, replace any deteriorated deck per the unit price allowances.

d. Verify existing plywood is properly secured, install additional fasteners as needed, apply a self-adhesive, modified bitumen membrane underlayment.
e. Install new Kynar pre-finished fascia cladding, edge metal and aluminum standing seam mansard roof panels. Color to be selected by the Owner.
f. Remove and reinstall on the existing curbs all power ventilators and new skylights, raise curb height and extend the ductwork as required.
g. Raise / extend the existing plumbing vents (VTR) as required.
h. Remove two large existing HVAC units, raise curb heights, install new base flashing and counterflashing, reinstall HVAC unit, modify existing ductwork, piping and electrical as needed, install new condensate drain piping. Provide new curb mounted weatherhead at southwest unit.
i. Replace existing hot stack flues with new stainless steel flues, roof curbs, and round-to-square curb caps.
j. Remove abandoned equipment and roof penetrations and infill deck, install new fabricated support stand for the roof ductwork.
k. At northeast roof area install new roof drains and overflow scupper through existing masonry parapet wall.
l. Apply a fiberglass vented base sheet, then a mixture of tapered and flat insulation as defined in the specifications. Provide new crickets upslope of all curbs, apply 1/4" gypsum coverboard.
m. Install new PVC coated aluminum drip edge, apply a new 80 mil PVC / 60 mil KEE membrane mechanically fastened to underlying steel deck.
n. Provide 20-year NDL weathertightness warranty design wind speed / pressure rider, and applicator's 2-year warranty.
o. Install new wall mounted roof access ladder to replace existing.
p. At two CIP concrete canopies, apply edge metal and new polyurethane coating.

g. Within Section 01110, there is a project rain day form that needs to be filled out for the month. Rain days need to be verified and signed for by either an Owner's Project Representative, or the Architect's Representative. This rain day form should be submitted with the monthly payment application from the contractor in order to claim a time extension due to weather conditions within the current payment period. Retroactive requests for rain days for previous payment periods will not be considered. The issue of delays due to weather and other circumstances are addressed further within article 8.3 of the General Conditions and should be reviewed by the Contractor. The rain day form in no way modifies those requirements, but simply serves to document the local conditions at the project site.

h. Within Section 01110, there is both Interior and exterior inspection forms which should be filled out with the representative of the Owner. There should also be a digital video file produced and digital photographs taken; submit copies of all this data to the architect prior to start of construction. These measures are to document the interior and exterior conditions prior to the start of construction as protection for both the Owner and the Contractor, so conditions prior to construction can be verified at a later date.

i. Form of Proposal – Section B includes unit prices, which are typically oriented toward repairs of and corrections to existing materials which may be discovered to be deteriorated or damaged. These unit prices are also defined in Unit Prices, section 01220, base bid quantity allowances are included in the bid for these repairs and replacements.

1. Maintenance Warehouse bid includes six unit prices, replacement of wood blocking (2), rigid insulation, metal deck, ceiling tile and roof blister repair.
2. FCTC Building "A" bid includes five unit prices, replacement of wood blocking, plywood sheathing, LWIC, ceiling tile and application of protective walkpads.
3. FCTC Building "B" bid includes five unit prices, replacement of wood blocking, plywood sheathing, LWIC, ceiling tile and application of protective walkpads.

i. These unit prices are intended for the replacement of deteriorated and/or damaged existing materials intended to remain. The installation of any materials designated as "NEW" within the project documents either by words, symbols, or graphically is not to be considered part of the unit price usage. The actual location of their use will in part be determined in the field based on actual conditions. Any use of these allowances must be approved by the Owner and/or Architect, as well as documented in daily reports and with photographs.

m. Bid Alternates are defined within section 01230, no bid alternates have been requested for either FCTC projects, nor will any voluntary alternates provided by the bidders be considered. Three bid alternates have been defined for the Maintenance Warehouse, one to overlay the existing roof system with a reflective surfaced modified bitumen cap sheet, and two for the application of polyurethane coatings over the existing membrane with either 10- or 20-year warranties.

n. The requirements for application of payment are included within Section 01270. The Contractor is to utilize an AIA G702 Application for payment and an AIA G703 Continuation Sheet. At least one (1) each of those forms will be in "red type original". Others may be copies. The continuation sheet shall reflect each discipline of the job and be broken down by labor and materials, per building to allow the contractor's application for payment to be reviewed and approved quickly.

o. Per the General Conditions, all aspects of the project, including enforcement of any warranty coverage must be per the laws and statutes of the State of Florida. This requirement is also part of the "Manufacturer's Notice of Intent to Issue Warranty" form for the modified bitumen roofing, most manufacturers warranties will need to be modified to comply with this requirement.

p. A building permit from the St. Johns County School District Building Code Administrator will be required. The contractor will be responsible for the application, securing of the building permit, and coordinating any required inspections of the work. There is no cost for the building permit. Signed & sealed documents will be submitted to the building department for review during the bidding process to facilitate the permitting process.

q. The Contractor is required to maintain a clean and safe work site; the site is to be survey for and cleaned of construction debris on a daily basis. Safety and compliance with all applicable safety requirements is the responsibility of the contractor throughout the course of the work.

5. Section 02025 – Existing Conditions Assessment contains some information gathered during our field investigation and design development, such as roof cuts, test pulls, thermal resistance calculations, and photographs. The link to the website containing the photographs (taken by our office during our site investigation) has been included for each project.

6. Per article 4.10 of the General Conditions, the prime contractor is to have a competent non-working superintendent on site whenever work is being performed by any trade or subcontractor. Their responsibilities include control of access to the site, coordination of trades, maintaining site conditions in an acceptable manner, and coordination with the Owner of all work.

7. In regards to the issue of the storage and staging area, there is an open parking lot and landscape areas adjacent to each of the buildings that has access from the street, exact use of areas will be determined during the pre-construction meetings.

8. The primary concern will be at all times to not impede any paths of emergency egress, nor interfere with the activities of the school when classes are in session. The Contractor would be expected to provide any fencing and other security measures they would deem necessary, especially once staff and students return to campus. The Contractor will be responsible for providing plywood protection over paved areas where dumpsters and equipment are stored or located on top of pavement such as parking lots, etc.

9. The Contractor will be required to repair any damage to the site and landscaping to restore pre-project conditions upon completion of the work.

10. Access to the interior of the building will be restricted to dates and times when the facility is not being used by staff or students, interior access to perform work within the buildings will need to be coordinated carefully with the Owner. Within section 01110 are some very specific minimum requirements for protection of the building interiors and the contents, which must be followed or exceeded for the duration of the project. The contractor will be responsible for moving all furnishings and equipment (as directed by the Owner), and providing the minimum protective measures defined within the documents.

11. Electrical services (120 volt) currently on-site will be made available by the school, although continuity of service can't be guaranteed due to the lack of on-site staff during the summer. The Owner will also allow use of their exterior hose bibs by the contractor for water use, unless either of these privileges is abused, in which case the Contractor will become responsible for their own power and water supply. Temporary toilet facilities are the responsibility of the contractor.

12. The areas and dimensions shown on the plans represent level footprint areas and dimensions and do not account for slope or any vertical surfaces. The contractor is reminded that General Roofing Note "1" on drawing A-1 requires the bidders to perform their own fieldwork upon which to base their bids.

13. A 20 year, NDL manufacturer's warranty with a wind rider is required for the two FCTC projects, the wind rider is to be based on either the un-factored design wind speed, or wind pressures. A "Manufacturer's Notice of Intent to Issue Roof Warranty" form will need to be submitted with all three bids, this form is attached to the roofing specification section.

14. The Bid date can't be extended, the bid date was established based on deadlines for the School Board meetings, and there is no flexibility for change.

15. Several modifications to the specifications are known at this time, and will be included within the first addendum, these are:
    a. Delete wind rider requirement from the manufacturer's warranty for the Maintenance Warehouse due to existing roof membrane being retained. For both FCTC buildings the warranty requirements remain unchanged.

b. Thermoplastic single-ply membrane specifications for all three projects will be revised to allow equivalent products from Mule-Hide and Tremco.
c. Section 01110 - Summary of Work will be revised to require all worker access to the roof to be at the exterior of the building, any interior access routes are not to be used by the contractor.

16. Questions raised during the pre-bid conference or the following roof inspection are as follows:

a. There was no mention in the meeting agenda of submitting the "Drug Free Workplace Certification Form".

Response: The "Drug Free Workplace Certification Form" is required as part of the bid package. And has already been included in the documents.

b. Can bidders return to the site some other day to further research conditions and perform their field work?

Response: No, due to Covid-19 protocols, today will be the only contractor access to the project sites.

c. The documents indicate the new single-ply membrane is to be mechanically fastened to the underlying steel deck at the two FCTC projects. Would it be acceptable to adhere the membrane directly to the existing lightweight insulating concrete in lieu of mechanical attachment?

Response: No, due to the addition of insulation value and drainage slope, we believe the system as specified is the most appropriate solution for these two buildings.

We believe the above accurately records the Pre-Bid meeting and briefly outlines the items of discussion. Unless contacted prior to 5:00 PM, February 5, 2021 we will consider the above correct. These minutes, and any clarifications or revisions contained therein, are to be considered a part of the bidding documents for this project.

Respectfully submitted,
A/R/C Associates, Incorporated

James W. Ripley, Vice President
RA, NCARB, RRC, RWC, REWC, RBEC, RRO, REWO

Attachments: Pre-Bid Meeting Agenda (2 pages)
Pre-Bid Meeting Sign-in Sheet (2 pages)

PRE-BID MEETING AGENDA **January 25, 2021**

FCTC Building A Roof Replacement and Repairs SJCSD Project No 2020-34
FCTC Building B Roof Replacement and Repairs SJCSD Project No 2020-35
2980 Collins Avenue
St. Augustine, FL 32084

Maintenance Warehouse Roof Replacement and Repairs SJCSD Project No 2020-36
299 School House Road
St. Augustine, FL 32084

Date/Time:
January 25, 2021 at 10:00 AM

Location:
Maintenance Warehouse
299 School House Road
St. Augustine, FL 32084

Attendees:
St. Johns County School District Facilities personnel
A/R/C Associates, Inc.
Engineers/ Sub-Consultants
Prospective Bidders

Agenda
Sign in sheet

Introductions

- SJCSD Facilities Personnel
- Architect/Consultants

Scope of Work

- **Maintenance Warehouse:** Perform designated repairs to existing modified bitumen roof system, modify some existing flashing conditions as detailed, install new edge metal, overlay existing roof system with PVC thermoplastic single-ply membrane, provide 20-year NDL warranty. Bid alternates requested for overlay of existing roof system with a reflective surfaced modified bitumen cap sheet, or polyurethane coatings with either 10- or 20-year warranties for owner consideration. Approximate roof area is 8,815 SF.
- **FCTC Building "A":** Remove existing single-ply membrane down to existing LWIC deck, apply vented base sheet, supplemental rigid insulation, new edge metal, roof system with PVC thermoplastic single-ply membrane, provide 20-year NDL warranty. Replace existing unit skylights, wrap and coated exposed ductwork for one rooftop package AC units. Approximate roof area is 24,130 SF. Remove existing metal standing seam mansard roof down to existing plywood deck, replace damaged materials, apply new underlayment, prefinished aluminum metal panels and associated flashings. Approximate roof area in plan is 2,900 SF.
- **FCTC Building "B":** Remove existing single-ply membrane down to existing LWIC deck, apply vented base sheet, supplemental rigid insulation, new edge metal, roof system with PVC thermoplastic single-ply membrane, provide 20-year NDL warranty. Replace existing unit skylights, increase flashing heights at two rooftop package AC units. Approximate roof area is 17,560 SF. Remove existing metal standing seam mansard roof down to existing plywood deck, replace damaged materials, apply new underlayment, prefinished aluminum metal panels and associated flashings. Approximate roof area is 100 SF. Clean and apply polyurethane coating to two cantilevered cast concrete canopy roofs, approximate area 600 SF. Provide new wall mounted roof access ladder.

Calendar

- Bid Opening – Wednesday, February 17, 2021 at 3:00 pm at St. Johns County School District Office of Facilities and Construction, 3740 International Golf Parkway, Suite 200, St. Augustine, Florida 32092
- Last day for Substitution requests – Friday, February 5, 2021
- Last day for Contractor questions – Friday, February 5, 2021
- Final Addendum – Wednesday, February 10, 2021

Activity	Date
A. Award of Contract	March 9, 2021
B. Notice to Proceed (upon completion and submission of all required documents and permits)	March 12, 2021
C. Substantial Completion	June 14, 2021
D. Final Completion	July 13, 2021

Coordination Issues

- Contractor Pre-qualifications
  1. Forms available at meeting (see Dennis Ramharry)
- Permits
  1. Building Construction Permit will be issued by the St. Johns County School District Building Department (at no cost).
- Inspections by A/R/C Associates, Inc.
- Review Form of Proposal
  1. Bidding requirements – Bond, Bid Proposal (Addenda Acknowledgement), Jessica Lundsford Act, Drug-Free Workplace, Certificate of Non-Debarment, and Public Entity Crime forms.
  2. Bid Bond/Security in the amount of 5% of the total bid is required.
- Jessica Lundsford Act – review Section 4.3.7 – Front End
  1. Process at St. Johns County School District website: www.stjohns.k12.fl.us (fingerprints, background check)
  2. All personnel that access the site must be cleared through the FDLE Sexual Offenders and Predators database.
- Temporary Services
  1. Water and power are available, but not guaranteed.

Scheduling

- Schedule of Values (review Section 01 28 00) – (labor and materials) in Excel format
  1. Include Cost of Mobilization and demobilization.

General

- Owner Purchased Material and Equipment and Owner Direct Purchase Program (review Section 01 34 00)
- Liquidated damages are outlined in the front end of the Project Manual.
- Contractor questions and substitution requests – submit to James Ripley at jimr@arc-arc.com no later than February 5, 2021.
- All contractors are encouraged to visit the site and familiarize themselves with the current site conditions.
- Meeting minutes and sign-in sheets will be available by addendum by January 28, 2021.

Questions

St. Johns County School District

Bid #2020-34 FCTC Building A,
Bid #2020-35 FCTC Building B,
Bid #2020-36 Maintenance Warehouse
Roof Replacement and Repairs Pre-Bid Meeting
January 25, 2021 10:00 AM

Name	Title	Company	Phone #	Email Address
DENNIS RAMHARRI	PM	SJCSD	904 547-8157	Dennis.Ramharri@stjohns.k12.fl.us
FRANK CERVASIO	DIR FAC + CONST	SJCSD	904 547.8160	frank.cervasio@stjohns.k12.fl.us
JACQUE Rayhorn	PM	SJCSD		
JAMES COPELAND	BO	SJCSD	954-826 0007	James.Copeland@stjohns.k12.fl.us
Ernest Tennyson	—	Teamcraft Roofing	210 2116	nick.hay@tcrfg.com
Austin King	Estimator	Perry Roofing Cont.	(352) 665-2305	AKing@perryroofing.com
Bobbie Martin	Estimator	McCurdy Walden	904 783-9000	BOBBIE@ MCCURDYWALDEN.COM
DOUG MOORE	—	CRS INC	904 987-4967	DMOORE@CRSSUPPLY.COM
Kris Linter	Arch. Specialist	Trumco	904 588-3457	klinter@trumcoinc.com
Chuck Veitinger	Maint. Manager	ST. JOHNS County School	904-547-3410	Chuck.Veitinger@STJOHNS.K12.FL.US
CHRIS BROOKS	EST.	QUALITY ROOFING	813 620 4777	Chris.Brooks@quality-roofing.c
DAVID DUKES	ROOFING	AMERITECH ROOFING SYSTEM	863 599-8875	dukes@ameritechgeneral.com
Kris Bridges	PM	JL Stone Construction	386-775-7479	Kris.Bridges@JLStoneconstruction.com
Jeremy Blansit	PM	Foresight Construction	904 672-5155	jblansit@foresightcgi.com
Josh McLendon	PM	CSI Contracting, Inc	850-556 0166	Jm@CSI-Contracting.com

St. Johns County School District

Bid #2020-34 FCTC Building A,
Bid #2020-35 FCTC Building B,
Bid #2020-36 Maintenance Warehouse
Roof Replacement and Repairs Pre-Bid Meeting
January 25, 2021 10:00 AM

Name	Title	Company	Phone #	Email Address
Blake McGraw	PM/Repairs	BBG Contracting Group, Inc	904 766 5800	blake@bbgcontracting.com
Cole Childers	Estimator	CRS	(904)699-6148	Childers@Childersroofing.com
Darrell Perry	Estimator	CRS	(904)218-8966	Dperry@Childersroofing.com
Bill O'Donnell	PM	Aduddell Industries	772 9719030	billyo@aduddell.v.com
VINCE NIESEN	PM	JENKINS	904 304 2400	VINCE@JENKINSROOFINGINC.COM
Tim Wilson	Estimator	Advanced Roofing	352 631-0368	timw@advancedroofing.com
TROY MILLER	ESTIMATOR	REGISTER ROOFING	904 215-8533	TROY@REGISTERROOFING.COM
Michael GUIA	Estimator	Architectural Sheet metal	407 421-6245	MGUIA@ASMFL.com
DAVID DUKES	ROOFING	AMER-TECH ROOFING SYSTEMS	863 577-8875	dukes@amertechgeneral.com
Kris Bridges	PM	JL Stone Construction	386-775-7479	Kris.Bridges@JLStoneConstruction.com
Charles McClone	OWNER	A-Z	904-669-8037	AtoZbuilders1@Aol.com
Sede Lusa	President	RFLusa & Sons S/M	863 559 [illegible]	Joe@RFLusa.Com

PROJECT MANUAL INDEX

ROOF REPLACEMENT and REPAIRS – BUILDING B

FIRST COAST TECHNICAL COLLEGE
2980 Collins Avenue
St. Augustine, Florida 32084

FOR

St. Johns County School District
200 School House Road
St. Augustine, Florida 32084

PREPARED BY:

A/R/C ASSOCIATES, INCORPORATED
601 North Fern Creek Avenue - Suite 100
Orlando, Florida 32803
(407) 896-7875 FAX # (407) 898-6043

Date: **November 6, 2020**

A/R/C Project No: 20021.00
Bid # 2020-35

Section 0001	Title Page	1 (only)
Section 0003	Table of Contents	1 thru 3

Bidding Requirements, Contract Forms, Conditions of the Contract, and General Requirements

	Advertisement for Bids	1 thru 2
Section A	Information for Bidders	1 thru 12
Section B	Form of Proposal	1 thru 6
	Bid Bond	7 thru 8
	Sub-Contractor List	9
	Manufacturer's Notice of Intent to Issue Roof Warranty	10 thru 11
	Jessica Lunsford Act	12 thru 13
	Public Entity Crime Form	14 thru 15
	Certification Regarding Debarment	1 (only)
	Drug Free Workplace Certification Form	1 (only)
	E-Verify Requirements	1 (only)
	AIA Document A312 – Performance Bond	1 thru 5
	AIA Document A312 – Payment Bond	1 thru 4

Enclosures:

1. Bid Bond
2. Sub-contractor List
3. Manufacturer's Notice of Intent to Issue Roof Warranty Form
4. Jessica Lunsford Act Acknowledgement
5. Public Entity Crimes Form
6. Certification Regarding Debarment
7. Drug Free Workplace Certification
8. E-Verify Requirements

St. Johns County School District
E-Verify Requirements

A. Pursuant to Section 448.095, Florida Statutes, Contractor shall register with and use the U.S. Department of Homeland Security's E-Verify system to verify the work authorization status of all employees hired during the term of this Agreement and must, upon request, provide evidence of compliance with this provision.

B. Subcontractors

1. Contractor shall also require all subcontractors performing work under this Agreement to use the E-Verify system for any employees they may hire during the term of this Agreement.

2. Subcontractors shall provide Contractor with an affidavit stating the subcontractor does not employ, contract with, or subcontract with an unauthorized alien, as stated in Section 448.095, Florida Statutes.

3. Contractor shall provide a copy of such affidavit to the School Board upon receipt and shall maintain a copy for the duration of the Agreement.

C. Failure to comply with this provision is a material breach of the Agreement, and School Board may choose to terminate the Agreement at its sole discretion. Contractor may be liable for all costs associated with School Board securing the same services, inclusive, but not limited to, higher costs for the same services.

D. It is the responsibility of the vendor/contractor to insure compliance with E-verify requirements (as applicable). To enroll in E-Verify, employers should visit the E-Verify website (http://www.uscis.gov/e-verify) and follow the instructions. The employer must retain the I-9 Forms for inspection. By affixing your signature below you hereby affirm that you will comply with E-Verify requirements.

Federal Employer Identification Number (FEIN): _____

Name of Firm: _____

Address: _____

Signature of Authorized Representative: _____

Print Name of Authorized Representative: _____